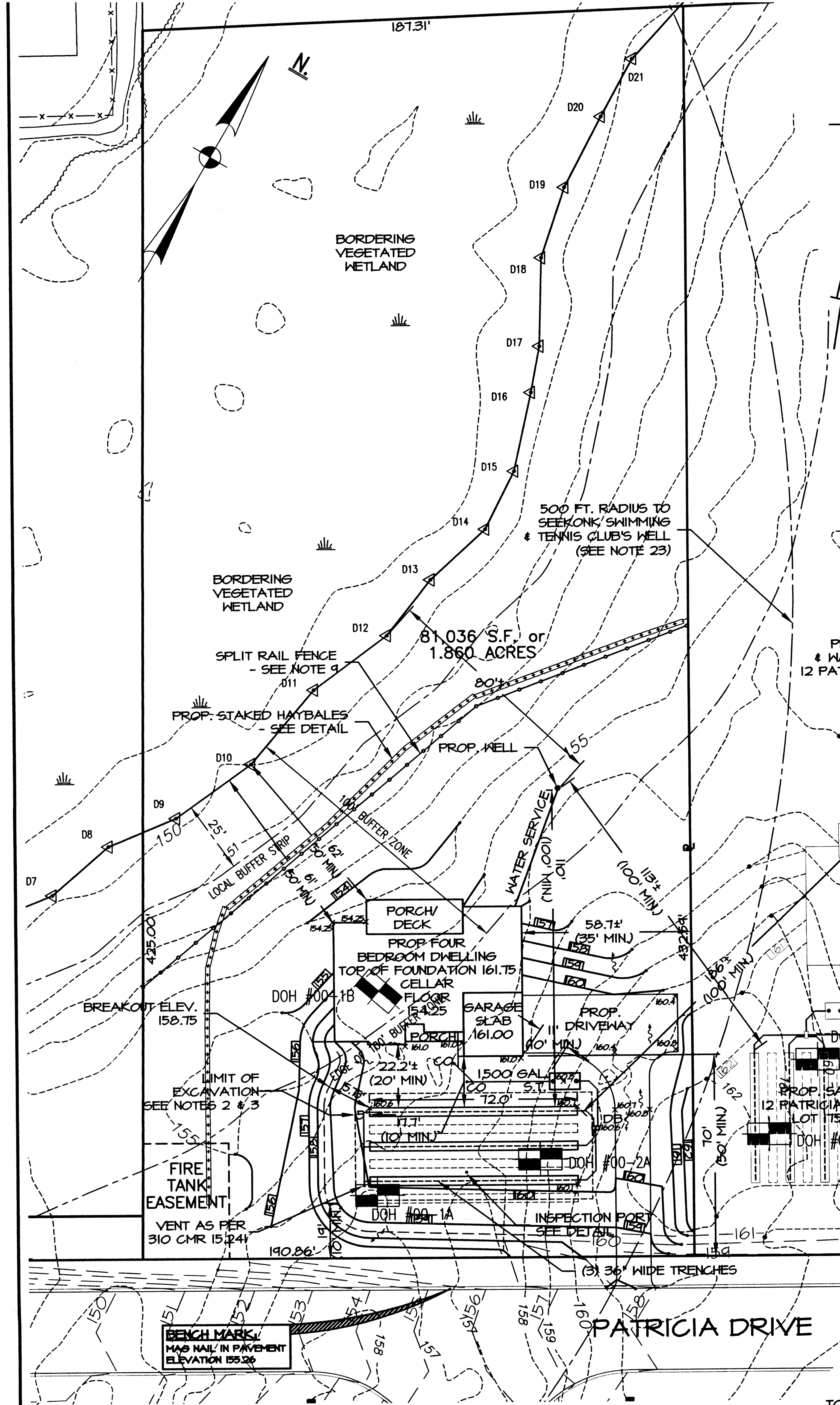

SITE PLAN

SCALE 1"=30'

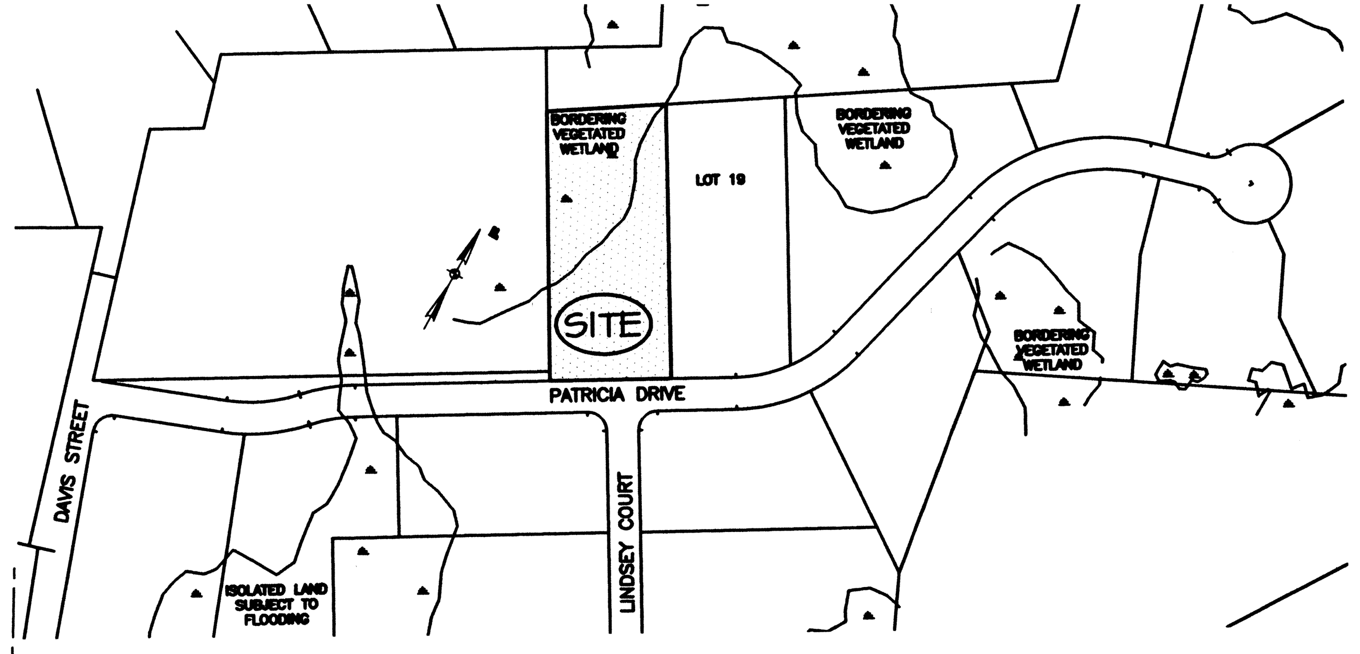

LOCATION MAP

NOT TO SCALE

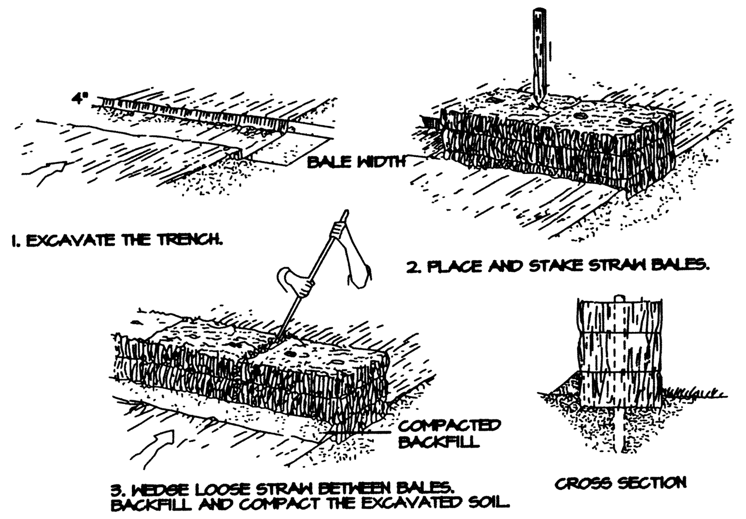

HAY BALE DETAIL

DAILY SEWAGE FLOW
- 4 BEDROOMS
- DAILY FLOW = 110 GAL/BEDROOM =440 GALLONS PER DAY

SEPTIC TANK REQUIREMENTS
- VOLUME = 2 x DAILY FLOW = 880 GALLONS
- USE 1,500 GALLON SEPTIC TANK - H 20-44 LOADING

LEACHING AREA REQUIREMENTS
- PERCOLATION RATE = 8 MINUTES PER INCH
- DESIGN FOR 5 MINUTES PER INCH - SOIL TEXTURE CLASS I
- EFFLUENT LOADING RATE = 0.66 GALLONS PER SQUARE FOOT
- SIDEWALL AREA = [(2 X 72') + (2 X 3')] X 0.5' X 3 TRENCHES = 225 S. F.
- BOTTOM AREA = 72' x 3' X 3 TRENCHES = 648 SQUARE FEET
- TOTAL LEACHING AREA = 873 SQUARE FEET

TOTAL LEACHING CAPACITY = 448 S. F. x 0.66 GAL/DAY/S.F.
- = 576 GAL/DAY > 440 GPD

EROSION & SEDIMENTATION CONTROL

1. ALL PERIMETER EROSION AND SEDIMENTATION CONTROLS MUST BE INSTALLED PRIOR TO THE COMMENCEMENT OF EARTHWORK.
2. ACCESSIBLE RESERVES OF HAY BALES AND STAKES ARE TO BE MAINTAINED ON SITE FOR ROUTINE MAINTENANCE AND IN THE EVENT OF UNANTICIPATED PROBLEMS REQUIRING EMERGENCY RESPONSE.
3. HAY BALES SHOULD BE INSTALLED IN ACCORDANCE WITH THE DETAILS PROVIDED.
4. NO WORK IS TO OCCUR ON THE WETLAND SIDE OF THE PERIMETER EROSION AND SEDIMENTATION CONTROLS. ALL PERIMETER CONTROLS SERVE AS THE PROJECT LIMIT OF DISTURBANCE.
5. NO STONES, BRUSH, CONSTRUCTION DEBRIS, LITTER, OR OTHER MATERIALS ARE TO BE DEPOSITED ON THE WETLAND SIDE OF THE EROSION AND SEDIMENTATION CONTROLS.
6. ALL DISTURBED SOILS NOT DESIGNATED FOR OTHER SURFACE TREATMENT ARE TO BE LOAMED AND SEEDED IMMEDIATELY FOLLOWING FINAL GRADING.
7. APPROPRIATE PRECAUTIONS SHOULD BE TAKEN TO PREVENT THE TRANSPORT OF SOIL OFFSITE FROM CONSTRUCTION EQUIPMENT.
8. ALL PERIMETER EROSION AND SEDIMENTATION CONTROLS MUST BE PROPERLY MAINTAINED AND MUST REMAIN IN PLACE UNTIL THE SOILS HAVE BEEN STABILIZED TO THE SATISFACTION OF THE ENGINEER AND THE SEEKONK CONSERVATION COMMISSION.
9. THE SPLIT RAIL FENCE SERVES AS THE LIMIT OF LAWN AND FUTURE YARD ACTIVITIES AND SHALL BE PERMANENTLY MAINTAINED IN GOOD CONDITION.

1. ALL WORK SHALL CONFORM TO THE 310 CMR 15.00 STATE ENVIRONMENTAL CODE - TITLE 5, THE RULES AND REGULATIONS OF THE SEEKONK BOARD OF HEALTH.
2. STRIP ALL TOPSOIL, SUBSOIL AND UNSUITABLE MATERIAL, TREE ROOTS AND STUMPS AND ANY OTHER IMPERVIOUS OR SPECIFIED SOIL IN THE AREA OF THE SYSTEM AND 5 FEET BEYOND THE EDGE OF LEACHING BED HORIZONTALLY IN ALL DIRECTIONS, WHERE POSSIBLE. AT A MINIMUM THE INSTALLER IS TO STRIP MATERIAL 3" VERTICALLY INTO THE NATURALLY OCCURRING PERVIOUS MATERIAL (LOAMY SAND HORIZON). REPLACE WITH GRANULAR FILL MEETING THE LATEST SPECIFICATIONS OF 310 CMR 15.255. FILL TO THE LIMITS INDICATED. ACTUAL FILL MATERIAL IS SUBJECT TO APPROVAL BY THE DESIGN ENGINEER AND/OR SEEKONK HEALTH AGENT. THE DESIGN ENGINEER AND/OR THE SEEKONK HEALTH AGENT MAY ALSO REQUIRE A SIEVE ANALYSIS OF THE FILL MATERIAL.
3. THE CONTRACTOR IS TO REMOVE ALL UNSUITABLE MATERIAL BELOW THE PROPOSED SOIL ABSORPTION SYSTEM PRIOR TO INSTALLATION. **WHERE SILT LOAM HORIZON IS ENCOUNTERED WITHIN THE DESCRIBED LIMITS OF EXCAVATION FOR THE SOIL ABSORPTION AREA, IT MUST BE TREATED AS IMPERVIOUS MATERIAL AND REMOVED TOGETHER WITH A MINIMUM OF 3" INTO THE NATURALLY OCCURRING PERVIOUS MATERIAL (LOAMY SAND).** SEE DEEP OBSERVATION HOLES SOIL DATA FOR FURTHER INFORMATION. **VERTICAL LIMITS MAY BE VARIABLE.**
4. CONTRACTOR SHALL CONTACT "**DIG-SAFE**" PRIOR TO CONSTRUCTION. LOCATION OF UTILITIES ON THIS PLAN ARE FROM EXISTING INFORMATION, BUT ARE ONLY TO BE CONSIDERED APPROXIMATE.
5. ALL PIPE TO BE 4" P. V. C. SCHEDULE 40, UNLESS OTHERWISE NOTED. ALL CONNECTIONS SHALL BE WATERTIGHT.
6. PLACE 6" MINIMUM COMPACTED CRUSHED STONE UNDER SEPTIC TANK AND DISTRIBUTION BOX.
7. SOIL TESTING FOR THIS PROJECT WAS PERFORMED BY DEAN MONSEES WITNESSED BY THE SEEKONK BOARD OF HEALTH AGENT, HAROLD CHENEVERT, JR. IF CONDITIONS ENCOUNTERED DURING CONSTRUCTION VARY SUBSTANTIALLY FROM THOSE SHOWN ON THIS PLAN, NOTIFY CAPUTO AND WICK, LTD. AND THE SEEKONK BOARD OF HEALTH AGENT BEFORE PROCEEDING WITH CONSTRUCTION. **IF IN DOUBT, ASK.**
8. GARBAGE GRINDER IS **NOT** ALLOWED WITH THIS DESIGN.
9. INLET AND OUTLET TEES FOR SEPTIC TANK ARE TO BE LOCATED DIRECTLY BELOW ACCESS COVERS.
10. BREAKOUT ELEVATION = 158.75. NO FINISHED GRADE BELOW 158.75 FOR 15 FEET (MINIMUM) FROM THE EDGE OF THE SYSTEM STONE.
11. WATER WELLS FOUND OR PROPOSED WITHIN 200' OF PROPOSED SEWAGE DISPOSAL SYSTEM ARE SHOWN.
12. IT IS RECOMMENDED THAT THE SEPTIC TANK BE INSPECTED TWICE A YEAR, AND BE CLEANED WHEN THE SOLIDS EQUAL ONE THIRD THE LIQUID DEPTH.
13. ALL STONE USED FOR CONSTRUCTION OF THE SOIL ABSORPTION SYSTEM MUST BE, AT A MINIMUM, DOUBLE WASHED AS SPECIFIED BY 310 CMR 15.247. **REPEAT WASHING BEFORE PLACEMENT TO ENSURE STONE IS FREE FROM IRON PARTICLES, FINES AND DUST.** THE ACTUAL STONE MATERIAL MAY ALSO BE SUBJECT TO APPROVAL BY THE DESIGN ENGINEER AND/OR SEEKONK HEALTH AGENT. THE DESIGN ENGINEER AND/OR THE SEEKONK HEALTH AGENT MAY ALSO REQUIRE A SIEVE ANALYSIS OF THE STONE MATERIAL.
14. MATERIAL AND EQUIPMENT FROM ALTERNATE MANUFACTURERS MAY BE USED IF EQUAL. APPROVAL FOR ALTERNATE MATERIAL AND/OR EQUIPMENT REQUIRED FROM ENGINEER AND THE TOWN PRIOR TO CONSTRUCTION. FULL SPECIFICATIONS FOR ALTERNATE EQUIPMENT MUST BE PROVIDED BY THE CONTRACTOR.
15. THE DESIGNER EXPRESSLY DISCLAIMS ANY RESPONSIBILITY FOR MONITORING, INSPECTING OR SUPERVISING THE ACTUAL CONSTRUCTION WORK. AFTER EXCAVATING AND PRIOR TO INSTALLING ANY IMPORTED MATERIAL, CONTACT THE BOARD OF HEALTH AGENT FOR A BOTTOM OF EXCAVATION INSPECTION. AFTER SYSTEM COMPONENTS ARE IN PLACE AND PRIOR TO BACKFILLING, CONTACT THE DESIGNER TO VERIFY THE LOCATION AND ELEVATION OF SYSTEM COMPONENTS AND PREPARE A RECORD DRAWING AS REQUIRED BY THE BOARD OF HEALTH.
16. THE DESIGNER EXPRESSLY DISCLAIMS ANY RESPONSIBILITY, FOR THE INSTALLATION AND MAINTENANCE OF THE SYSTEM. IT SHALL BE THE RESPONSIBILITY OF THE INSTALLER TO CONSTRUCT THE SYSTEM IN ACCORDANCE WITH 310 CMR 15.00 AND LOCAL BOARD OF HEALTH REGULATIONS AND THE RESPONSIBILITY OF THE OWNER FOR PROPERLY MAINTAINING THE SYSTEM IN ACCORDANCE WITH 310 CMR 15.00 AND THE LOCAL BOARD OF HEALTH REGULATIONS. REFER TO 310 CMR 15.00 AND THE LOCAL BOARD OF HEALTH REGULATIONS FOR ADDITIONAL INFORMATION CONCERNING THE CONSTRUCTION AND OPERATION OF THE SYSTEM. THE INSTALLER AND OWNER SHOULD REVIEW AND APPLY 310 CMR 15.00 AND THE LOCAL BOARD OF HEALTH REGULATIONS.
17. SYSTEM TO BE CONSTRUCTED BY A INSTALLER LICENSED BY THE SEEKONK BOARD OF HEALTH.
18. FILL MEETING THE REQUIREMENTS OF 310 CMR 15.255(3) MUST BE PLACED ON SCARIFIED, RELATIVELY DRY NATURAL SOIL. THE CONTRACTOR SHALL PROVIDE FOR DEWATERING AS REQUIRED AND ALL WORK SHALL BE PERFORMED UNDER DRY CONDITIONS PER 310 CMR 15.255(6). THE DISCHARGE WATER MUST BE PROPERLY DISPOSED OF AND SHALL NOT BE A SOURCE OF POLLUTION AND/OR EROSION.
19. THE CELLAR FLOOR ELEVATION SHOWN HAS BEEN SUGGESTED AS A MINIMUM BASED ON OBSERVED GROUNDWATER CONDITIONS. SINCE THE GROUNDWATER LEVELS FLUCTUATE ANNUALLY, NO WARRANTY OF A DRY CELLAR IS EXPRESSED OR IMPLIED.
20. INSTALL MAGNETIC TAPE OVER ALL PIPE AND SYSTEM COMPONENTS.
21. ALL DISTURBED AREAS NOT DEPICTED TO HAVE OTHER FINAL SURFACE TREATMENT SHALL RECEIVE 4" LOAM AND SEED.
22. PLAN EXISTING GRADES MAY VARY FROM ORIGINAL GRADES DUE TO SUBDIVISION CONSTRUCTION ACTIVITY.
23. THE INTERIM WELLHEAD PROTECTION AREA (IWPA) RADIUS SHOW ON THE SITE PLAN IS CENTERED AT THE LOCATION OF THE PUBLIC WELL FOR THE SEEKONK SWIMMING AND TENNIS CLUB. THE RADIUS WAS OBTAINED FROM MR. DAN DISALVIO OF THE MASS. DEP BUREAU OF RESOURCE PROTECTION, DRINKING WATER PROGRAM. THE RADIUS FOR THE IWPA IS 633 FT. FROM WELL. THE APPROVED PUMPING RATE FOR THIS WELL IS 10,471 GALLONS PER DAY, OR 7.28 GALLONS PER MINUTE. ACCORDING TO MR. DISALVIO AND THE MA. DEP 2012 DRINKING WATER QUALITY REPORT, THE WELL SERVING THE SEEKONK SWIMMING AND TENNIS CLUB IS CLASSIFIED AS A TRANSIENT NON-COMMUNITY (TNC) PUBLIC WELL.
24. PORTIONS OF THIS LOT FALL WITHIN THE IWPA OF THE SEEKONK SWIMMING AND TENNIS CLUB. THE NITROGEN LOADING RATE IS LESS THAN OF 440 GALLONS PER DAY PER ACRE, THE MAXIMUM LIMIT FOR SYSTEMS WITHIN A NITROGEN SENSITIVE AREA.

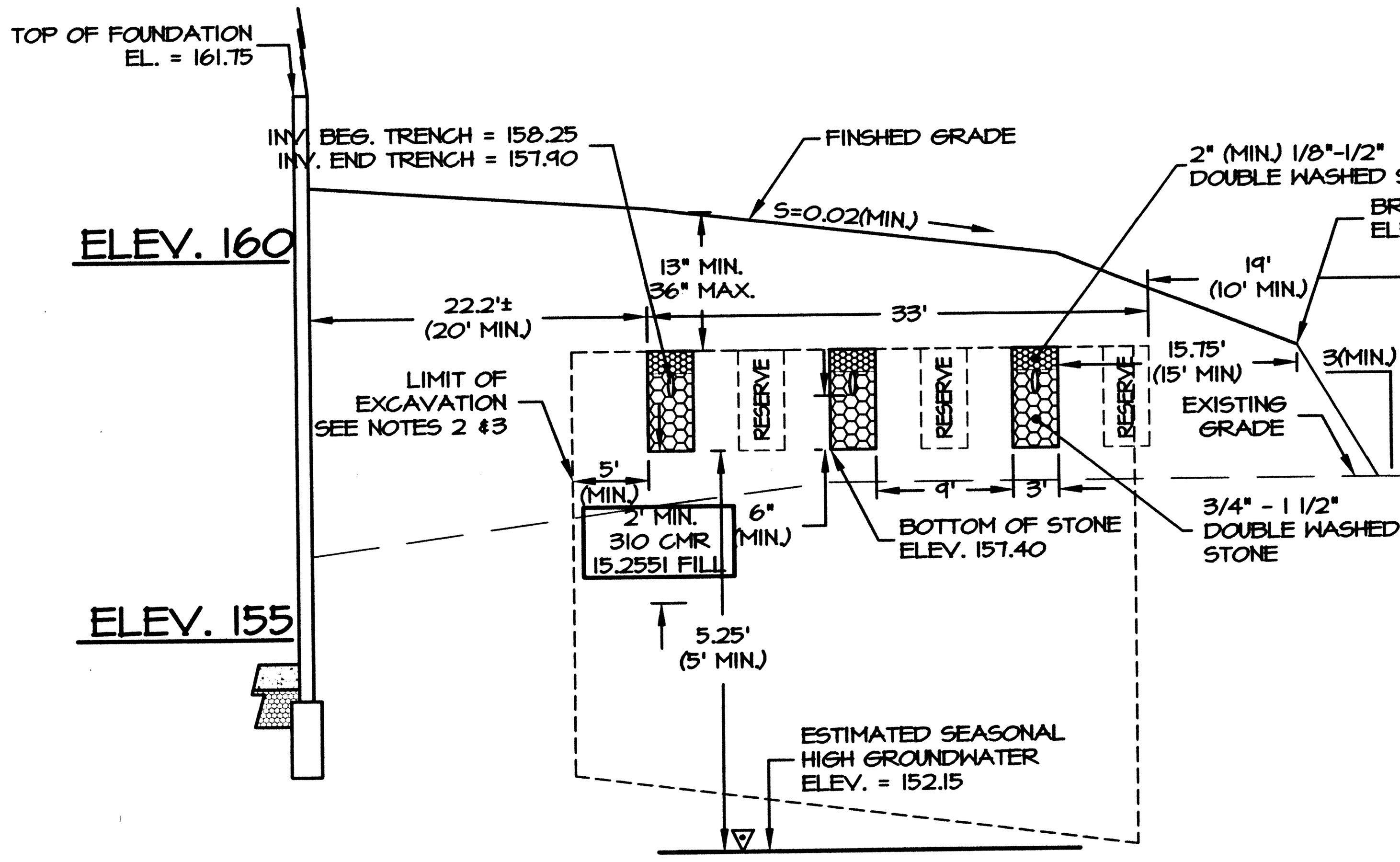

LEACHING TRENCH SECTION

SCALES { HORIZONTAL 1"=10' / VERTICAL 1"=2'

DEEP OBSERVATION HOLE 00 - 1A LOG
ORIGINAL GROUND ELEVATION = 157.15

DEPTH	HORIZON	TEXTURE	COLOR	MOTTLING	OTHER
+3" - 0"	O	-	10 YR 2/2		-
0" - 35"	B	SANDY LOAM	10 YR 6/8	-	-
35" - 120"	C	LOAMY SAND	2.5 Y 6/3	-	SOME COBBLES

OBSERVED GROUNDWATER - NONE
GROUNDWATER READING 3/23/2001 - 74" (ELEV. 150.98)
EST. S. H. GROUNDWATER - 151.46
PERC. RATE = < 2MPI @ 53" *

WEEPING FROM PIT FACE - NONE
FRIMPTER ADJ. - 0.48'
DATE OF TESTING - 8/22/00

DEEP OBSERVATION HOLE 00 - 1B LOG
ORIGINAL GROUND ELEVATION = 155.10

DEPTH	HORIZON	TEXTURE	COLOR	MOTTLING	OTHER
+3" - 0"	O	-	10 YR 2/2		-
0" - 3"	B	SANDY LOAM	10 YR 6/8	-	-
33" - 108"	C	LOAMY SAND	2.5 Y 6/3	-	SOME COBBLES

OBSERVED GROUNDWATER - NONE
GROUNDWATER READING 3/23/2001 - 65" (ELEV. 149.68)
EST. S. H. GROUNDWATER - 150.16
PERC. RATE = 8MPI @ 50"

WEEPING FROM PIT FACE - NONE
FRIMPTER ADJ. - 0.48'
DATE OF TESTING - 8/22/00

DEEP OBSERVATION HOLE 00 - 2A LOG
ORIGINAL GROUND ELEVATION = 159.00

DEPTH	HORIZON	TEXTURE	COLOR	MOTTLING	OTHER
+2" - 0"	O	-	10 YR 2/2		-
0" - 36"	B	SANDY LOAM	10 YR 6/8	-	BASIL (SIC)
36" - 72"	C1	SILTY LOAM	2.5 Y 7/2	-	CLEAN, 40% GRAVEL
72" - 120"	C2	LOAMY SAND	2.5 Y 6/2	-	SOME COBBLES

OBSERVED GROUNDWATER - NONE
GROUNDWATER READING 3/23/2001 - 88" (ELEV. 151.67)
EST. S. H. GROUNDWATER - 152.15
PERC. RATE = < 2MPI @ 93" *

WEEPING FROM PIT FACE - NONE
FRIMPTER ADJ. - 0.48'
PROVIDE 2' (MIN.) SEPTIC GRAVEL
DATE OF TESTING - 8/22/00

* - UNABLE TO SATURATE
TEST PREFORMED BY: DEAN MONSEES
TESTING WITNESSED BY: HAROLD CHENEVERT, JR., SEEKONK BOARD OF HEALTH

69-774

FRIMPTER CALCULATIONS

SITE WATER LEVEL RANGE = 3.7'
OBSERVATION WELL MARCH 28, 2001 - 5.36'
OBSERVATION WELL MAXIMUM = 5.02'
OBSERVATION WELL RANGE = 2.6'
GROUNDWATER ADJUSTMENT = Sr(OWc-OWmax) / OWr
GROUNDWATER ADJUSTMENT = 3.7'(5.36'-5.02') / 2.6' = 0.48'

LOT INFORMATION
ASSESSORS PLAT 26, LOT 175
SUBDIVISION RECORD LOT 20
ZONE: R-4
AREA = 81,036 S.F. OR 1.86 ACRES

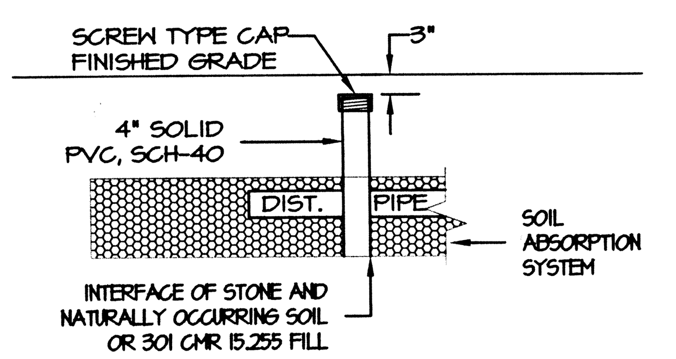

INSPECTION PORT DETAIL

NOT TO SCALE

LEGEND

-100-	EXISTING CONTOUR
100	PROPOSED CONTOUR
MA. STD.	MASSACHUSETTS STANDARD
INV.	INVERT OF PIPE
P. V. C.	POLYVINYL CHLORIDE PIPE
S. D. R.	STANDARD DIMENSION RATIO
R. C. P.	REINFORCED CONCRETE PIPE
CONC.	CONCRETE (BIT. OR P. C.)
BIT.	BITUMINOUS
P. C.	PORTLAND CEMENT
TYP.	TYPICAL
F.G. 100x00	FINISHED SPOT GRADE
100x00	EXISTING SPOT GRADE
T. C.	TOP OF CURB
B. C.	BOTTOM OF CURB
ℙ	PROPERTY LINE
-x-CLF-x-	CHAIN LINK FENCE
ST	SEPTIC TANK
DB	DISTRIBUTION BOX
	DEEP OBSERVATION HOLE
	PERCOLATION TEST HOLE

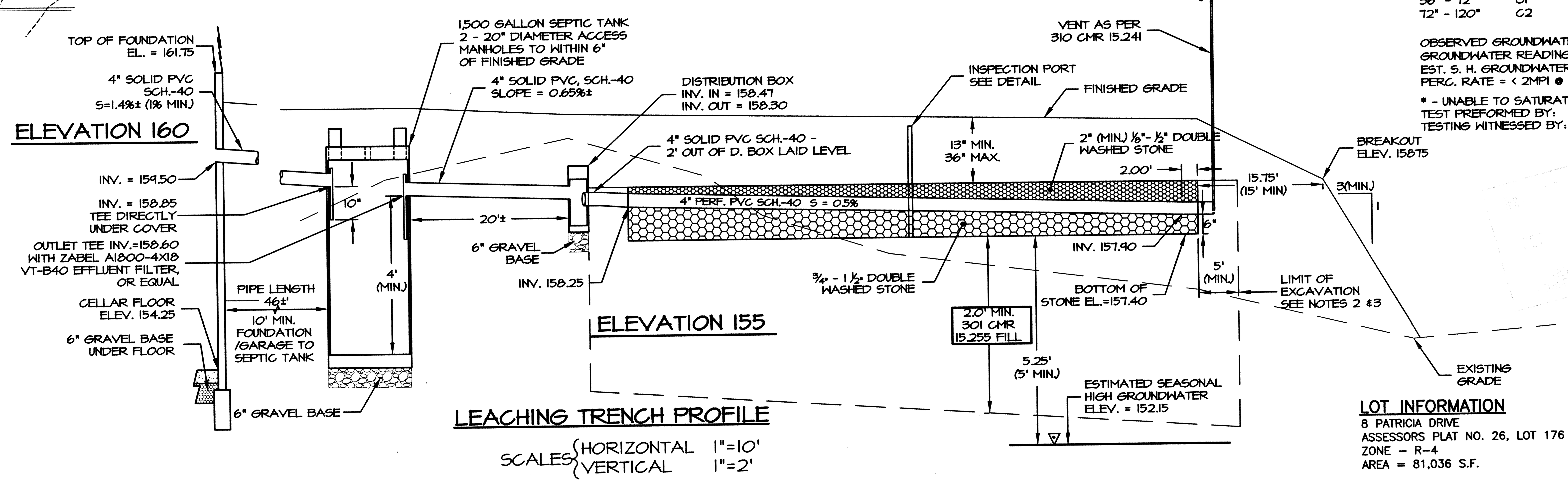

LEACHING TRENCH PROFILE

SCALES { HORIZONTAL 1"=10' / VERTICAL 1"=2'

LOT INFORMATION
8 PATRICIA DRIVE
ASSESSORS PLAT NO. 26, LOT 176
ZONE - R-4
AREA = 81,036 S.F.

I CERTIFY THAT I HAVE CONTACTED THE SEEKONK WATER DISTRICT FOR THE LOCATION OF THE EXISTING WATER SERVICE CURB STOP FOR PLAT 26, LOT 176 AND WAS INFORMED THAT THERE IS NO CURB STOP CURRENTLY FOR THIS LOT. THE PROPOSED DWELLING WILL BE SERVED BY A PRIVATE WELL TO BE INSTALLED IN CONFORMANCE WITH THE SEEKONK BOARD OF HEALTH REGULATIONS.

COMMONWEALTH OF MASSACHUSETTS — CIVIL No. 35256 — REGISTERED PROFESSIONAL ENGINEER
10/23/13
REV. OCTOBER 23, 2013 - NOI

SEWAGE DISPOSAL SYSTEM
8 PATRICIA DRIVE
ASSESSORS PLAT 26 - LOT 176
SEEKONK, MASSACHUSETTS

CAPUTO AND WICK LTD.
1150 PAWTUCKET AVE.
RUMFORD, R.I. 02916
401-434-8880

DATE: SEPTEMBER 2013
SHEET: 1