Grinder Pump Station
(BOYDCO Model 403A2 or equal)

General

Contractor shall furnish and install one (1) BOYDCO prefabricated reinforced concrete submersible type wet pit sewage pump station. The station shall be of precast reinforced concrete construction. Manufacturer shall guarantee that all joints in pumping chamber will be watertight.

Pumping stations shall be complete with two (2) grinder sewage pumps, three (3) level float switches, and a single door hatchway.

Station will be factory assembled and delivered to the job site with all equipment installed and guaranteed by manufacturer. Manufacturer's own personnel will ship and install station. Four (4) copies of Operation Manuals shall be provided along with start-up assistance to insure correct operation of system.

Pump Chamber

Pump chamber shall be constructed of concrete reinforced for compressive strength to a minimum of 5000 PSI. Chamber has inside dimensions of 4' diameter x 8' headroom for 12.56 square foot station. The walls shall be 5" thick. The floor shall be 6" thick. The roof slab shall be 8" thick. Manufacturer shall seal all joints and openings to be watertight with the exception of the inlet pipes.

Pumps

Pumps shall be EBARA DGU11 grinder pumps. Each pump shall be designed for a capacity of 20 GPM against 60' total dynamic head. Motors shall be hermetically sealed submersible type electric motor of 2 HP, 3600 RPM, for operation on 230 volt, 1 phase, 60-hertz power for each pump. Motor nameplate horsepower rating shall not be exceeded by the brake horsepower requirement of the pump for design condition of service for the impeller diameter installed. Motor shaft shall be stainless steel, impervious to the liquid and waste matter being handled. Thermal overload protections shall be built into the motor.

Lifting eyes shall be cast into the motor housing adequately designed to lift the entire pump/motor assembly. Pump construction shall be in accordance with ASTM Spec. No. A48-64, Class 30, which shall include cast iron for pump casing. All pipe flanges shall be faced and to the thickness required for compliance with 125 lb. American Standard. Bolt slots are acceptable in lieu of drilled holes.

Pump casing shall be of the volute type and made of cast iron. The casing shall be of one-piece construction and of a design to minimize clogging and flow interference.

Impeller shall be cast in one piece and directly mounted to a one piece stainless steel motor-pump shaft. It shall not require separate pump shaft or coupling. Each impeller shall be a radial-recessed type. The ends of the blades shall be rounded to prevent clogging.

Impeller hub shall be provided with keyway and key, and will be locked to the pump shaft and maintained in this position by a washer and self-locking impeller screw.

Motor bearings shall be in accordance with electric motor specification, B-10 life of 60,000 hrs.

Piping

Piping shall be schedule 40 PVC. Shutoff valves to be full port quarter turn ball valves. Check valves to be heavy-duty bronze body, ball type, with a pressure rating of 125 PSI.

Controls

Control panel shall include individual circuit breakers, double pole definitive purpose contractors rated for up to 2 HP, alarm buzzer, on-off test switch, pump H-O-A switch, alternator, pump run light, terminal strip, and ground bar. Pump controls will be designed to operate on (230) volt, (1) phase, 60-hertz electric power. Panel will be NEMA (4X) designed for outdoor or indoor mounting.

Level float switches shall actuate sewage pumps in station. Switches shall be polyurethane enclosed switch and designed specifically for sewage pumping applications.

FS-1 functions as pump shut off and causes alternator to select next pump for the next cycle. This switch is set at low level in wet well. FS-2 starts pumping cycle and operates at normal pump start level. FS-3 starts lag pump if level rises above normal pump start levels and actuates high water alarm both locally and by closing alarm telemetering contacts.

Telemetering

There will be a local annunciator on front of control panel with alarm lights for the following alarm conditions:

1. High Water

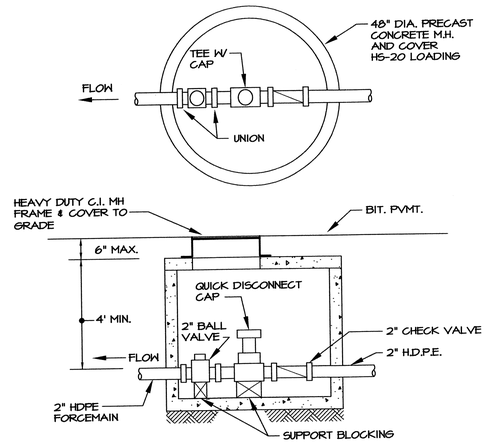

FORCE MAIN MANHOLE

NOT TO SCALE

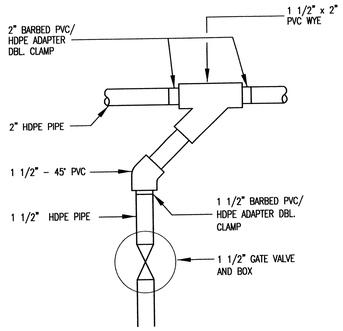

SANITARY SERVICE CONNECTION

NOT TO SCALE

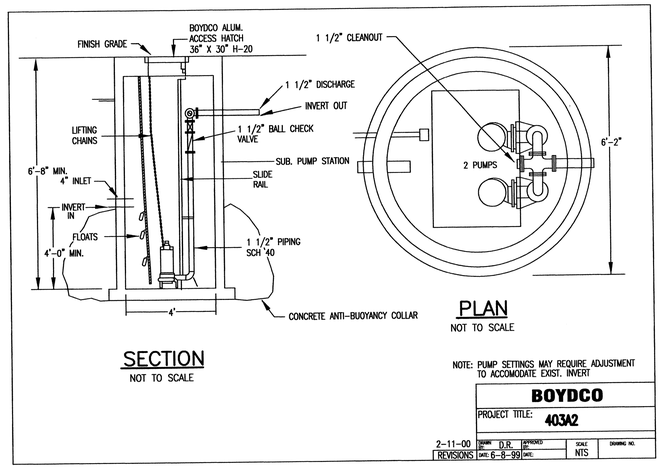

SECTION

NOT TO SCALE

PLAN

NOT TO SCALE

NOTE: PUMP SETTINGS MAY REQUIRE ADJUSTMENT TO ACCOMODATE EXIST. INVERT

BOYDCO				
PROJECT TITLE: 403A2				
2-11-00	DRAWN D.R.	APPROVED	SCALE NTS	DRAWING NO.
REVISIONS	DATE 6-8-99	DATE		

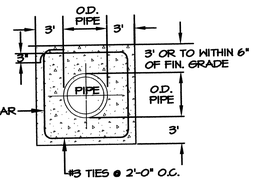

NOTES:
1. ALL CONCRETE TO BE 3,000 PSI, 28 DAYS.
2. CONCRETE WIDTH 12"

ANTI-SEEP COLLAR

NOT TO SCALE

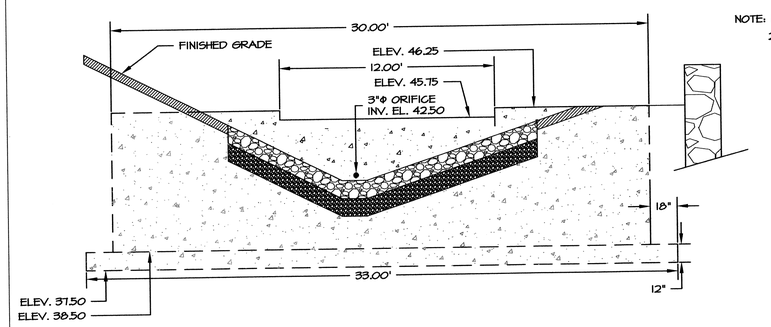

FLOW CONTROL (WEIR) STRUCTURE

SCALE : 1" = 4'-0"

NOTE: 1. CONCRETE TO BE 4000 PSI @ 28 DAYS
2. INSTALL RIP RAP TO FINISHED GRADE BELOW ELEV. 45.50

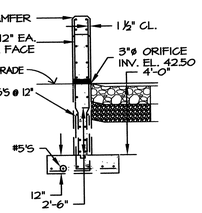

CONTROL STRUCTURE SECTION

SCALE : 1" = 4'-0"

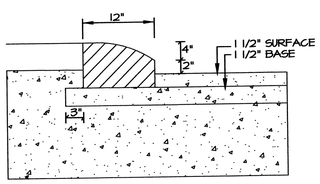

BIT. BERM DETAIL

SCALE 1" = 1'-0"

SEED MIXTURE:
CREEPING RED FESCUE - 50%
TALL FESCUE OR
REED CANARYGRASS - 50%

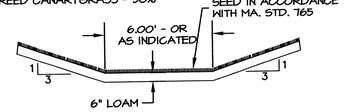

WATER QUALITY SWALE

SCALE 1"=4'

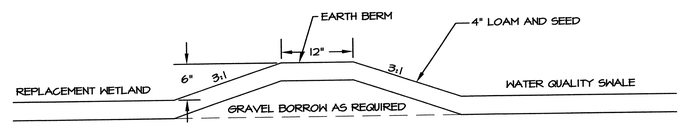

EARTH & STONE BERM DETAIL

SCALE 1"=1'

STORMWATER MANAGEMENT OPERATION AND MAINTENANCE PLAN

THE OWNERSHIP, OPERATION AND MAINTENANCE OF THE STORMWATER MANAGEMENT SYSTEM WILL BE THE RESPONSIBILITY OF THE DEVELOPER, RI SEEKONK HOLDINGS LLC.

RECOMMENDED STORMWATER MAINTENANCE SCHEDULE

1. THE ROADWAY AREA SHOULD BE SWEPT CLEAN ON A SEMI-ANNUAL BASIS TO REMOVE CONTAMINANTS AND SOIL FINES. IT IS PARTICULARLY IMPORTANT TO SCHEDULE SPRING SWEEPING TO REMOVE RESIDUAL SAND RESULTING FROM WINTER SNOW AND ICE REMOVAL OPERATIONS.
2. INSPECT CATCH BASINS AND DRAIN MANHOLES SEMI-ANNUALLY (SPRING AND LATE FALL/EARLY WINTER) AND REMOVE SEDIMENT, LEAVES AND DEBRIS AS NEGESSARY. IT IS IMPORTANT THAT THE SUMPS BE PROPERLY MAINTAINED TO PREVENT DISCHARGE OF FINES INTO THE STORMWATER SYSTEMS.
3. INSPECT INTERCONNECTION PIPING ON AN ANNUAL BASIS, AND REMOVE ALL FINES OR OTHER CONTAMINANTS. LATE SPRING OR EARLY SUMMER INSPECTION SCHEDULE IS CONSIDERED PREFERABLE.
4. INSPECT THE DETENTION BASINS, FOREBAYS AND WATER QUALITY SWALES ON AN ANNUAL BASIS, AND REMOVE ANY SEDIMENT, LEAVES AND DEBRIS. A LATE SPRING OR EARLY SUMMER INSPECTION SCHEDULE IS CONSIDERED PREFERABLE.
5. INSPECT THE STORMWATER RECHARGE STRUCTURES ON AN ANNUAL BASIS, AND REMOVE ANY SEDIMENT, LEAVES AND DEBRIS. A LATE SPRING OR EARLY SUMMER INSPECTION SCHEDULE IS CONSIDERED PREFERABLE.

64-592

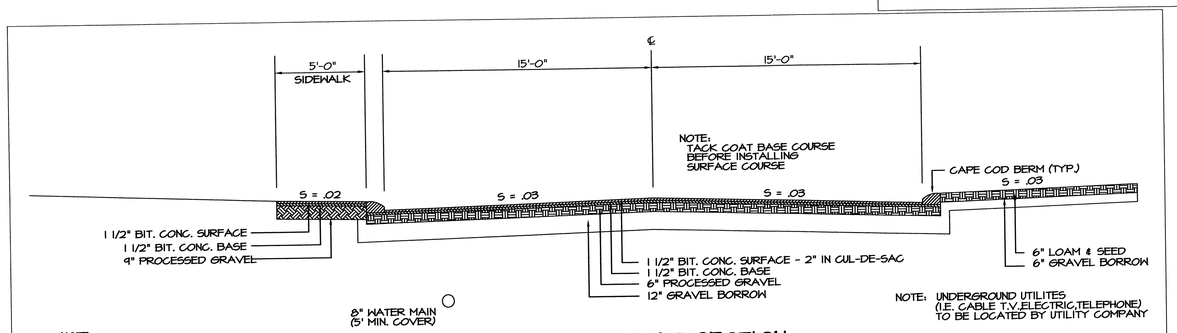

NOTE:
WATER MAIN TO BE INSTALLED IN ACCORDANCE WITH THE SEEKONK WATER DISTRICT SPECIFICATIONS AND RULES AND REGULATIONS, IF REQUIRED.

TYPICAL ROAD SECTION

SCALE: 1" = 4'-0"

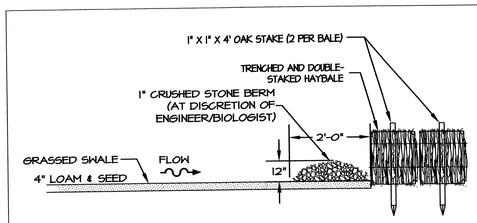

NOTE:
HAY BALES AND CRUSHED STONE BERM TO BE REMOVED AFTER SITE IS STABLIZED AND APPROVED BY THE SEEKONK CONSERVATION COMMISSION.

WATER QUALITY SWALE DISCHARGE WITH OUTLET PROTECTION

(NOT TO SCALE)

COMMONWEALTH OF MASSACHUSETTS
RODNEY W. WICK
CIVIL
No. 27837
REGISTERED PROFESSIONAL ENGINEER

DETAIL NO. 3
GREENBRIER CONDOMINIUMS
PREPARED FOR
RI SEEKONK HOLDINGS, LLC
FALL RIVER AVENUE & RACHEL AVENUE
SEEKONK, MASSACHUSETTS

CAPUTO AND WICK LTD.
1150 PAWTUCKET AVE.
RUMFORD, R.I. 02916
401-434-8880

DATE March 28, 2006

SHEET 28 OF 29