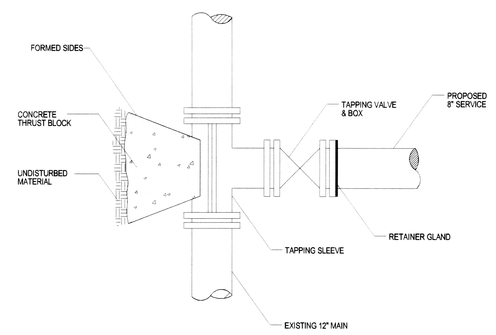

TAPPING SLEEVE & GATE VALVE DETAIL

N.T.S.

GENERAL NOTES

1. BEDDING SHALL BE CLASS I-A WORKED BY HAND. IF GROUNDWATER IS ANTICIPATED, THEN BEDDING SHALL BE CLASS I-B COMPACTED TO 85% STANDARD PROCTOR.

2. HAUNCHING SHALL BE WORKED AROUND THE PIPE BY HAND TO ELIMINATE VOIDS AND SHALL BE CLASS I-A OR CLASS I-B OR CLASS II COMPACTED TO 85% PROCTOR.

3. INITIAL BACKFILL SHALL BE CLASS I-A WORKED BY HAND, OR CLASS I-B OR CLASS II COMPACTED TO 85% STANDARD PROCTOR.

4. INITIAL BACKFILL NOT UNDER PAVED AREAS CAN BE CLASS III COMPACTED TO 90% STANDARD PROCTOR.

5. FINAL BACKFILL SHALL BE CLASS I, II, OR III COMPACTED AS NOTED IN NOTES 3. AND 4.

6. FINAL BACKFILL NOT UNDER PAVED AREAS CAN BE CLASS IV-A COMPACTED TO 95% STANDARD PROCTOR.

7. ALL MATERIALS ARE CLASSIFIED IN ACCORDANCE WITH ASTM D 2321-89.

8. ALL MATERIALS SHALL BE INSTALLED IN MAXIMUM 8" LOOSE LIFTS IN ACCORDANCE WITH ASTM D 698. CLASS III AND IV-A MATERIALS SHALL BE COMPACTED NEAR OPTIMUM MOISTURE CONTENT.

9. FILL SALVAGED FROM EXCAVATION SHALL BE FREE OF DEBRIS, ORGANICS AND ROCKS LARGER THAN 3".
10. ALL TRENCH EXCAVATIONS SHALL BE SLOPED, SHORED, SHEETED, BRACED, OR OTHERWISE SUPPORTED IN COMPLIANCE WITH OSHA REGULATIONS AND LOCAL ORDINANCES. (SEE SPECIFICATIONS)

PIPE DIA	W
<12"	O.D. OF PIPE + (12" TO 18")
>12"	> O.D. OF PIPE + 18"

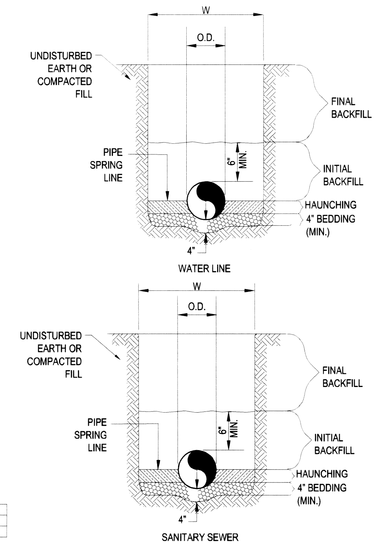

NOTE TRENCH TO BE LINED WITH AN IMPERMEABLE BARRIER WHEN DEWATERING IS REQUIRED.

UTILITY TRENCH AND BEDDING

N.T.S.

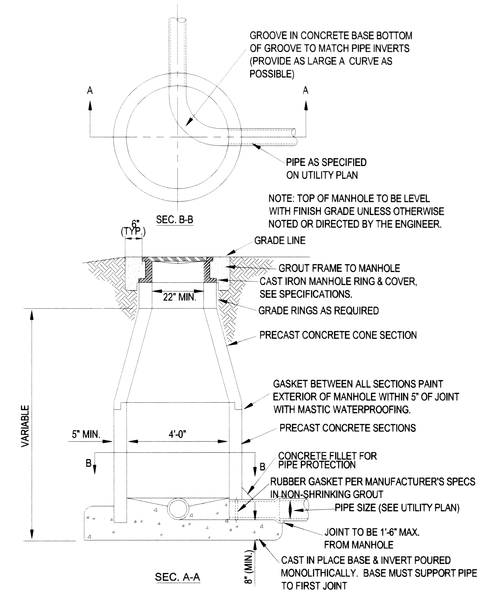

PRE-CAST SANITARY SEWER MANHOLE

N.T.S.

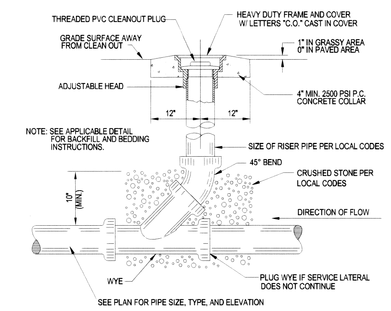

SANITARY SEWER CLEAN-OUT

N.T.S.

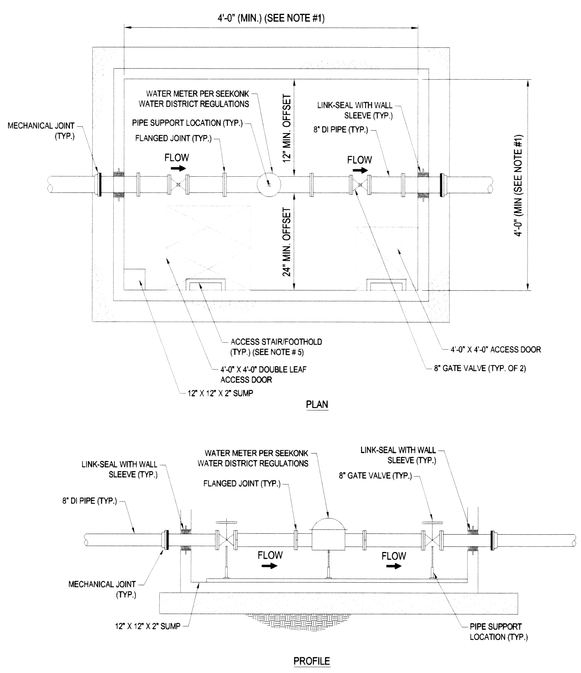

NOTES:

1. PIT INTERIOR SHALL BE A MINIMUM OF 4 FEET LONG, 4 FEET WIDE AND MUST HAVE A CLEAR HEIGHT OF 6 FEET HIGH. FINAL METER PIT SHALL BE SIZED UPON COMPLETION OF WATER METER SIZING AND SHALL COMPLY WITH THE REQUIRED SEPARATION DISTANCES.

2. PIT MUST BE WATERTIGHT.

3. PIT OPENING AND COVER MUST BE AT LEAST 36 INCHES IN DIAMETER.

4. THE LOCATION OF THE STEPS/FOOTHOLDS CAN BE INSTALLED IN EITHER CORNER.

5. FOOTHOLDS MUST BE MADE OF STEEL, ALUMINUM OR OTHER MATERIALS APPROVED BY THE SEEKONK WATER DISTRICT AND INSTALLED NO MORE THAN 12 INCHES APART SO THAT THE TOP FOOTHOLD IS WITHIN 12 INCHES OF THE COVER AND WITHIN 12 INCHES OF THE BOTTOM.

6. PIT MUST BE EITHER "CAST IN PLACE" OR "PRE-FORMED", CONCRETE BLOCK WILL NOT BE ALLOWED.

7. IF BUILT IN ROADWAY OR PARKING AREAS, THE PIT MUST BE ADEQUATELY REINFORCED.

8. ALL FIRE LINE METERS MUST MEET THE FOLLOWING REQUIREMENTS:
   A. FACTORY MUTUAL APPROVED
   B. RECORD IN GALLONS, WITH A VISIBLE "DIRECT" READ REMOTE
   C. LOW FLOW BY-PASS METER (NO TURBINE TYPE), RECORDING IN GALLONS, WITH A REMOTE READER
   D. CERTIFIED TEST REPORT/TAG FROM THE METER MANUFACTURER

PRECAST CONCRETE METER VAULT

N.T.S.

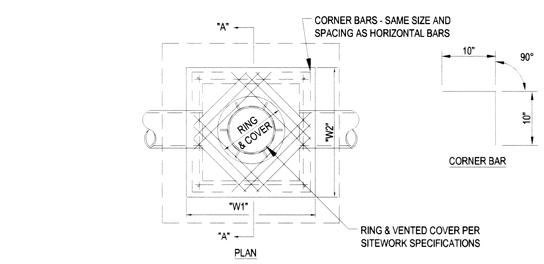

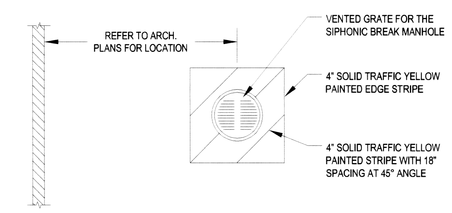

STRIPING DETAIL FOR THE SIPHONIC BREAK MANHOLE

GENERAL NOTES:

1. ALL EXPOSED CORNERS TO HAVE 3/4" CHAMFER.
2. REFER GRADING PLAN FOR PIPE SIZES, LOCATIONS, AND INVERTS.
3. A SQUARE OR RECTANGULAR MANHOLE MAY BE USED IN LIEU OF A ROUND MANHOLE. PIPES SHALL CONNECT TO THE ENDS OR SIDES OF THE MANHOLE. CONNECTION SHALL NOT BE MADE AT CORNERS OF MANHOLE.
4. ALL REINFORCING BARS TO BE GRADE 60.
5. ALL REINFORCING BARS TO HAVE 2" COVER.
6. OPENINGS FOR INLET & OUTLET PIPES ARE LOCATED AS REQUIRED PER GRADING PLAN.
7. A 6'x6' PAINTED STRIPED AREA SHALL BE CENTERED ON THE SIPHONIC BREAK STORM MANHOLE TO PREVENT ANY PARKING OR COVERING OF THE VENTED GRATE WITH ANY OBJECTS. THIS STRIPED AREA SHALL BE PAINTED WITH 4" SOLID TRAFFIC YELLOW STRIPES WITH 18" SPACING AT 45° ANGLE.
8. PRECAST MANHOLE MAY BE USED UNLESS OTHERWISE NOTED OR DIRECTED BY THE ENGINEER.

PRECAST MANHOLE SPECIFICATIONS

ASTM C478 - PRECAST REINFORCED CONCRETE MANHOLE SECTIONS
ASTM C913 - PRECAST CONCRETE WATER AND WASTEWATER STRUCTURES
CONCRETE: 4000 PSI AE (MIN.)
JOINT: WATERTIGHT RUBBER GASKET

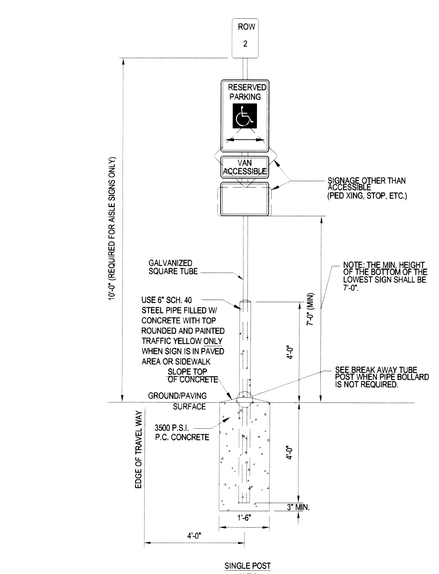

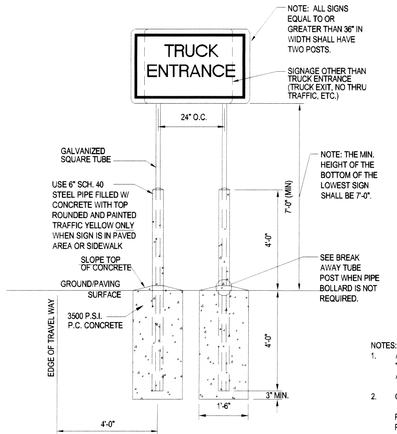

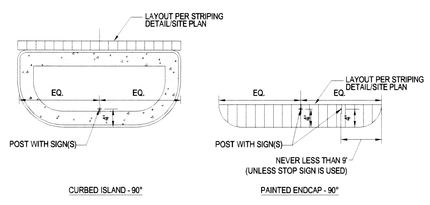

SIGN LOCATIONS - 90° PARKING

NOTES:
1. ALL SIGNS SHALL COMPLY WITH U.S. DEPARTMENT OF TRANSPORTATION, FEDERAL HIGHWAY ADMINISTRATIONS "MANUAL OF UNIFORM TRAFFIC CONTROL DEVICES", LOCAL CODES AND AS SPECIFIED. MOUNT SIGNS TO POST IN ACCORDANCE WITH MANUFACTURER'S INSTRUCTIONS.

2. GALVANIZED SQUARE TUBE

   POST TUBES - 2"x2"x3/16" 14ga
   POST TUBE SHALL MEET ASTM A1011 GRADE 50.
   POST TUBE GALVANIZED AS PER ASTM A653 GRADE 90.

   ANCHOR TUBE - 2-1/4"x2-1/4"x3/16" 14ga
   HEAVY DUTY ANCHOR TUBE SHALL MEET ASTM A500 GRADE B.
   STRUCTURAL TUBE AND STEEL SHALL BE HOT DIP GALVANIZED PER ASTM A123.

   THE UPPER SIGN POST SHALL TELESCOPE INSIDE THE ANCHOR TUBE A MINIMUM OF 12". THE ANCHOR TUBE SHALL BE A MINIMUM 48" DEEP WITH 2" MIN. 4" MAX. EXPOSED ABOVE FINISH GRADE.

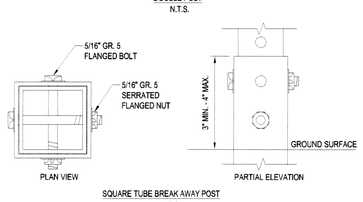

SQUARE TUBE BREAK AWAY POST
N.T.S.

SIGN MOUNTING AND BASE DETAIL

N.T.S.

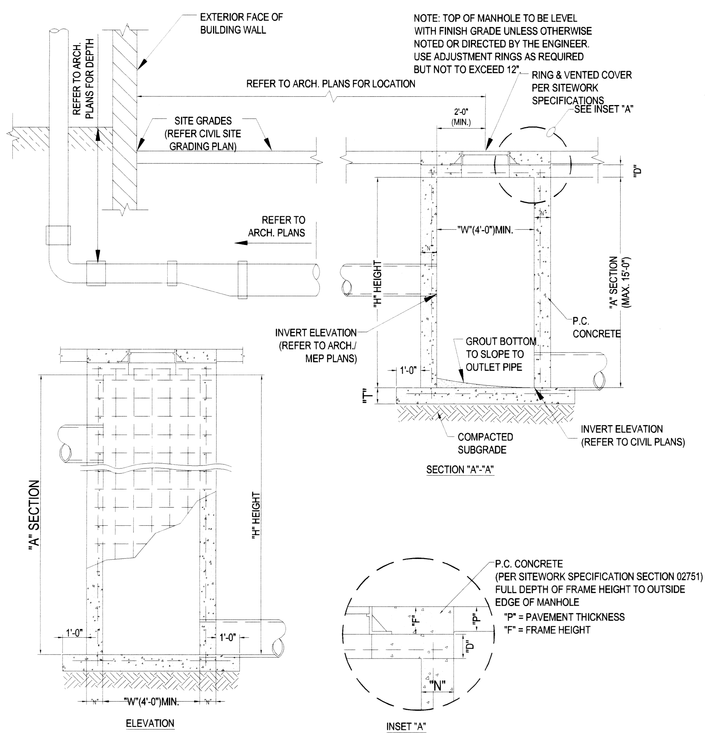

REINFORCEMENT SCHEDULE, BASE SECTION	
"A"	#4's @ 6" E.W.

TABLE OF 'W' DIMENSIONS

PIPE SIZE	SKEW OF CROSS DRAIN			
SINGLE	STRAIGHT	30°	45°	
24"	4'-0"	4'-0"	4'-10"	
30"	4'-0"	4'-7"	5'-8"	
36"	4'-0"	5'-3"	6'-5"	
42"	5'-3"	5'-11"	7'-3"	
48"	5'-10"	6'-7"	8'-0"	
60"	7'-0"	7'-10"	9'-8"	
DOUBLE	FOR "A" SECTION ONLY			
24"	7'-0"	7'-10"	9'-5"	
30"	8'-2"	9'-2"	11'-0"	
36"	9'-4"	10'-6"	12'-6"	
42"	10'-6"	11'-10"	14'-2"	
48"	11'-8"	13'-2"	15'-10"	

REINFORCEMENT SCHEDULE, WALLS

SECTION	WIDTH ("W")	HOR.	VERT.
"A"	4'	#4's @ 9"	#4's @ 10"
	BETWEEN 4' & 7'	#6's @ 9"	#4's @ 10"
	GREATER THAN 7'	#5's @ 4 1/2"	#4's @ 10"

TABLE OF "T" & "N" DIMENSIONS

SECTION	WIDTH ("W")	"T"	"N"	"D"
"A"	BETWEEN 4' & 7'	6" + PIPE THICKNESS	8"	6"
	GREATER THAN 7'	6" + PIPE THICKNESS	8"	8"

REINFORCEMENT SCHEDULE, TOP

DIMENSIONS	STEEL	SPECIAL PATTERN
W1 = 7' OR LESS	#4's @ 8" E.W.	DIAGONAL @ COVER
W2 = 7' OR LESS	#4's @ 8" E.W.	DIAGONAL @ COVER
W1 = 7' OR LESS	#4's @ 8" E.W.	DIAGONAL @ COVER
W2 = 7' OR GREATER	#4'S @ 6" E.W.	DIAGONAL @ COVER
W1 = 7' OR GREATER	#4's @ 6" E.W.	DIAGONAL @ COVER
W2 = 7' OR GREATER	#4's @ 6" E.W.	DIAGONAL @ COVER

SIPHONIC BREAK CONCRETE STORM MANHOLE

N.T.S.

BOHLER ENGINEERING

CORPORATE OFFICE:
◆ WORCESTER, MA

CIVIL & CONSULTING ENGINEERS
SURVEYORS
PROJECT MANAGERS
ENVIRONMENTAL CONSULTANTS
LANDSCAPE ARCHITECTS

◆ SOUTHBOROUGH, MA ◆ TOWSON, MD ◆ ALBANY, NY ◆ RICHMOND, VA ◆ PORTSMOUTH, NH ◆ CHALFONT, PA ◆ HAZLETON, PA ◆ STERLING, VA ◆ VIRGINIA BEACH, VA ◆ FORT LAUDERDALE, FL ◆ TAMPA, FL

THE INFORMATION, DESIGN AND CONTENT OF THIS PLAN ARE PROPRIETARY AND SHALL NOT BE COPIED OR USED FOR ANY PURPOSE WITHOUT THE EXPRESS WRITTEN CONSENT OF BOHLER ENGINEERING. © BOHLER ENGINEERING

REVISIONS

REV	DATE	COMMENT	BY
1	6/03/11	REVS PER TOWN PB FILING	KBS
2	9/6/11	BUILDING LOCATION	AWP
3	11/14/11	TOWN REVIEW COMMENTS	AWP
4	12/14/11	REVS PER TOWN/PEER REVIEW COMMENT	EGD
5	01/23/12	REVS PER CON. COMM. COMMENTS	JSE
6			
7			
8			
9			
10			
11			
12			
13			
14			
15			
16			
17			
18			
19			
20			
21			
22			
23			
24			
25			
26			
27			
28			

THE FOLLOWING STATES REQUIRE NOTIFICATION BY EXCAVATORS, DESIGNERS, OR ANY PERSON PREPARING TO DISTURB THE EARTH'S SURFACE ANYWHERE IN THE STATE:
(MA, ME, NH, RI, VT 1-888-344-7233)
(CT 1-800-922-4455)
(NY 1-800-962-7962)

PERMIT SET

PROJECT No.:	W050623
DRAWN BY:	KBS/CFD
CHECKED BY:	MDS/JAK
DATE:	03/14/2011
SCALE:	AS SHOWN
CAD I.D.:	W050623SS5_DETS

PROJECT: SITE DEVELOPMENT PLANS FOR

Walmart

STORE # 2184-07
PROPOSED RETAIL DEVELOPMENT

LOTS 25, 29, 30, 33, 63, 199 & 218, MAP 7
1300 FALL RIVER AVENUE &
ANTHONY STREET
TOWN OF SEEKONK
BRISTOL COUNTY, MA

BOHLER ENGINEERING
352 TURNPIKE ROAD
SOUTHBOROUGH, MA 01772
Phone: (508) 480-9900
Fax: (508) 480-9080
www.BohlerEngineering.com

M.D. SMITH
MATTHEW D. SMITH
CIVIL
No. 45496
PROFESSIONAL ENGINEER
MASSACHUSETTS
RHODE ISLAND No. 8145
CONNECTICUT No. 24567
MAINE License No. 11023
NEW HAMPSHIRE LICENSE No. 12931

SHEET TITLE:
CONSTRUCTION DETAIL SHEET

SHEET NUMBER:
D-3
OF 18

REV 5-01/23/2012