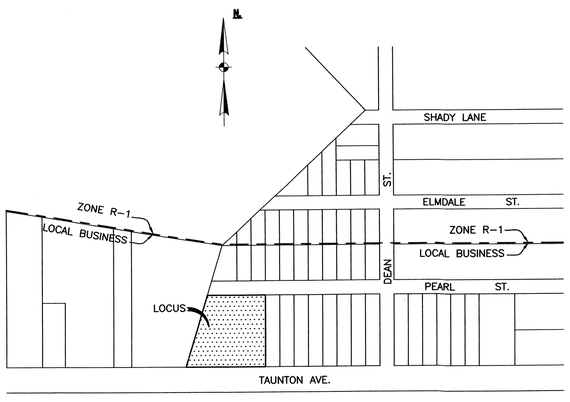

LOCATION MAP
SCALE: 1"=200'

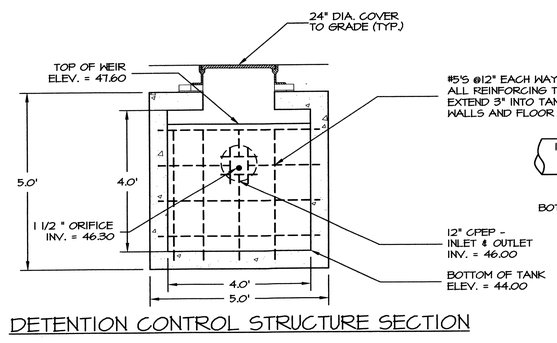

DETENTION CONTROL STRUCTURE SECTION

SCALE 1" = 2'

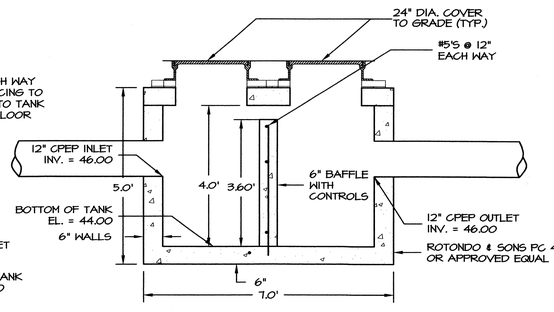

DETENTION CONTROL STRUCTURE PROFILE

SCALE 1" = 2'

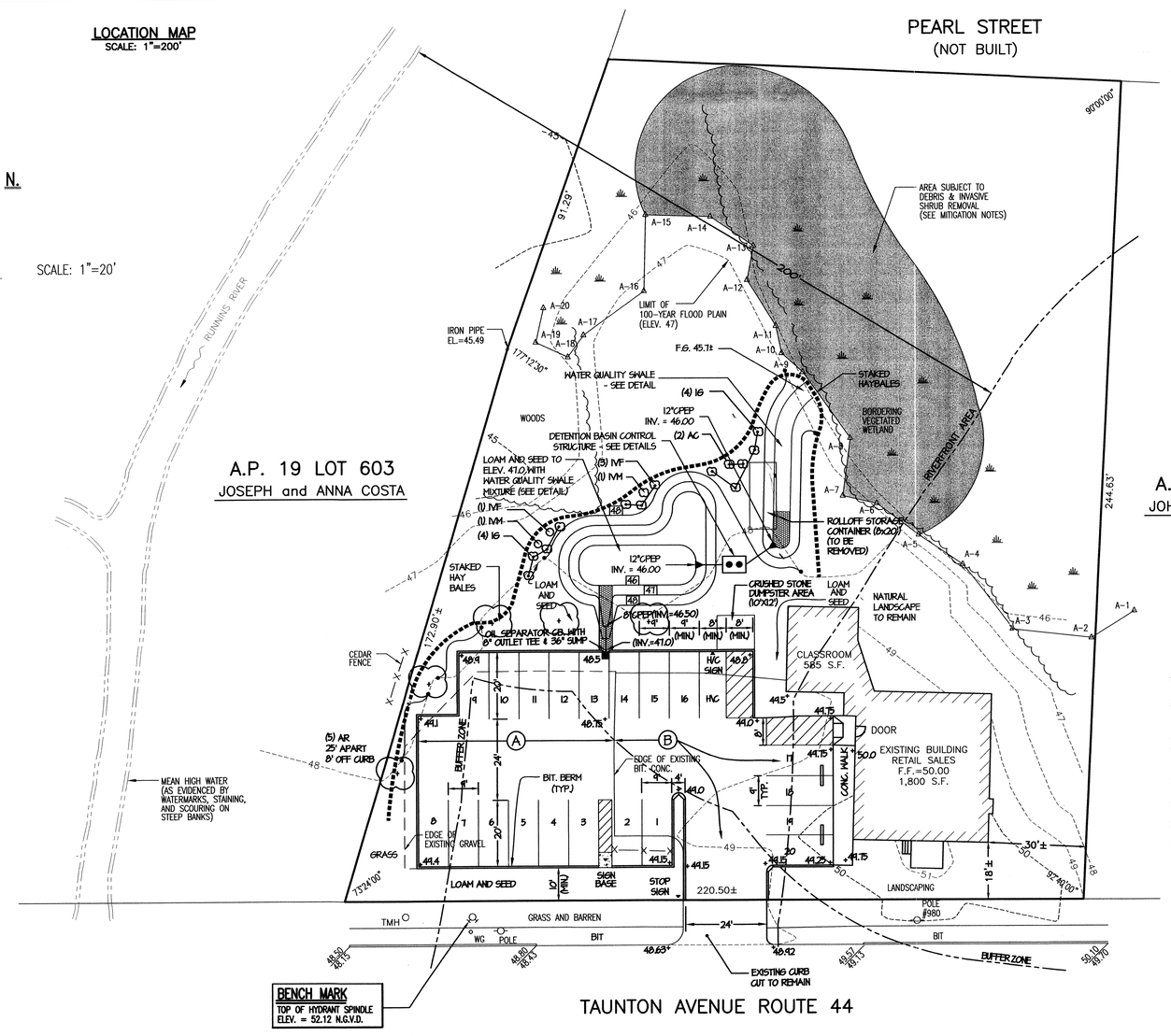

BENCH MARK
TOP OF HYDRANT SPINDLE
ELEV. = 52.12 N.G.V.D.

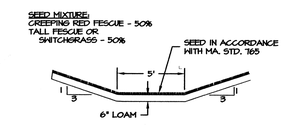

WATER QUALITY SWALE

NOT TO SCALE

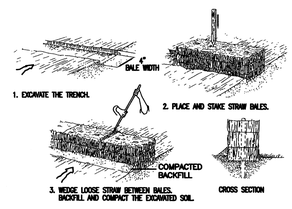

HAY BALE DETAIL

STORMWATER MAINTENANCE SCHEDULE

1. ALL MAINTENANCE (INCLUDING CLEANING) REQUIRED DURING THE CONSTRUCTION PHASE OF THE PROJECT SHALL BE THE RESPONSIBILITY OF THE CONTRACTOR AND SHALL INCLUDE:

   A. MEASURES NEEDED TO INSURE THE PROPER OPERATION OF THE STORMWATER MANAGEMENT FEATURES TO INCLUDE INSPECTION, CLEANING AND REPAIRS TO ALL PIPES, INTAKE AND DISCHARGE STRUCTURES, RIP-RAP SPLASH PADS, DETENTION BASIN, AND GRASSED SWALE.

   B. ROUTINE INSPECTION OF ALL PROPOSED SLOPES, BERMS, AND CONTROL STRUCTURES FOR INTEGRITY/STABILITY AND EVIDENCE OF SOIL EROSION. INSPECTIONS SHALL OCCUR FOLLOWING ALL PRECIPITATION EVENTS OF 0.1 INCHES OR MORE.

2. AFTER THE COMPLETION OF PROJECT CONSTRUCTION AND FINAL STABILIZATION OF THE ENTIRE SITE, THE INSPECTION AND MAINTENANCE OF STORMWATER MANAGEMENT FEATURES SHALL BE PERFORMED AS FOLLOWS:

   A. THE DETENTION BASIN SHALL BE INSPECTED AT LEAST TWICE EACH YEAR. ACCUMULATED SEDIMENTS WILL BE REMOVED FROM THE DETENTION BASIN AT THE END OF THE FIRST (INITIAL) YEAR OF OPERATION. THEREAFTER, ACCUMULATED SEDIMENTS WILL BE REMOVED AT THE TIME OF YEARLY INSPECTIONS IF DEEMED NECESSARY BY THE INSPECTOR. AT A MINIMUM, SEDIMENT WILL BE REMOVED ONCE EVERY TEN (10) YEARS OR MORE FREQUENTLY IF SEDIMENTS INTERFERE WITH THE INTENDED VEGETATIVE COVER OR JEOPARDIZE PROPER FUNCTION OF THE INLET AND/OR OUTLET STRUCTURES.

   B. DETENTION BASIN OUTLET STRUCTURES SHALL BE INSPECTED EVERY 6 MONTHS TO INSURE PROPER OPERATION. INSPECTIONS SHALL OCCUR IN SPRING AND FALL, AFTER SNOW MELT AND LEAF DROP.

   C. THE DETENTION BASIN, BERMS, AND GRASSED SWALE SHALL BE INSPECTED AT LEAST TWICE EACH YEAR FOR EROSION. PROBLEM AREAS SHALL BE RESEEDED IMMEDIATELY.

   D. THE DETENTION BASIN, BERMS, AND GRASSED SWALE SHALL BE MOWED AT LEAST ONCE EACH CALENDAR YEAR TO PREVENT THE GROWTH OF UNWANTED WOODY VEGETATION.

   E. TRASH, DEBRIS, ETC. SHALL BE REMOVED FROM THE DETENTION BASIN AND PIPE INLET AS DETERMINED AT THE TIME OF INSPECTION.

RIVERFRONT AREA NOTES

1. TOTAL RIVERFRONT AREA ON PARCEL = 35,196 SF.
2. EXISTING DEGRADED SURFACES IN RIVERFRONT AREA = 7,041 SF (20.0% OF RIVERFRONT AREA,) WHERE DEGRADED SURFACE IS ROOFTOP, PAVEMENT, GRAVEL, STORAGE CONTAINER.
3. TOTAL PROPOSED IMPERVIOUS SURFACE IN RIVERFRONT AREA = 7,339 SF (20.9% OF RIVERFRONT AREA).
4. NET PROPOSED INCREASE OF IMPERVIOUS SURFACE WITHIN RIVERFRONT AREA = 298 SF (0.9% OF RIVERFRONT AREA).
5. NET PROPOSED REDUCTION OF PROPOSED DEGRADED SURFACE WITHIN INNER RIPARIAN ZONE = 99 SF.

MITIGATION NOTES

1. CONCRETE BLOCKS, BOULDERS, TIMBERS, AND OTHER CONSTRUCTION DEBRIS SHALL BE REMOVED WITHIN AREA INDICATED. HEAVY EQUIPMENT IS NOT TO ENTER THE WETLAND. REMOVAL SHALL BE THROUGH USE OF MACHINERY BUCKETS OR CABLING/LIFTING. DEBRIS SHALL NOT BE DRAGGED.
2. DEBRIS REMOVAL SHALL OCCUR PRIOR TO CONSTRUCTION OF THE STORMWATER MANAGEMENT FEATURES AND INSTALLATION OF PERIMETER HAY BALES.
3. ANY SURFACE DISTURBANCE IN UPLANDS BEYOND HAY BALE LIMITS SHOWN SHALL BE LOAMED AND SEEDED WITH A CONSERVATION GRASS MIX AS REQUIRED.
4. REMOVAL OF INVASIVE SHRUBS SHALL OCCUR UNDER THE SUPERVISION OF A COMPETENT BIOLOGIST AND SHALL OCCUR MANUALLY AS FOLLOWS:
   A. STRIP LEAF LITTER AWAY FROM STEM TO DRIP LINE.
   B. LOOSEN ROOTS WITH SHOVEL AND REMOVE ROOT BALL WHOLE WITH SHRUB.
   C. SHAKE SOIL OFF ROOT BALL INTO RESULTING DEPRESSION.
   D. SMOOTH DISTURBED AREA AND RESPREAD LEAF LITTER OVER DISTURBED AREA.
   E. DISPOSE OF REMOVED PLANT MATERIAL RESPONSIBLY IN OFFSITE UPLAND LOCATION.
5. IF SHRUB REMOVAL RESULTS IN SIGNIFICANT UNDERSTORY GAPS, THEN THE BIOLOGIST SHALL SPECIFY THE PLANTING OF HIGHBUSH BLUEBERRY (VACCINIUM CORYMBOSUM) AND/OR NORTHERN ARROWWOOD (VIBURNUM RECOGNITUM) AS NEEDED.

PLANTING SCHEDULE

SYMBOL	QUANTITY	COMMON NAME	SCIENTIFIC NAME	SIZE	
AR	5	RED MAPLE	ACER RUBRUM	2.5" CAL	B&B
AC	2	SHADBUSH	AMELANCHIER CANADENSIS	4-5'	B&B
IVM	2	WINTERBERRY (MALE)	ILEX VERTICILLATA	3-4'	B&B
IVF	4	WINTERBERRY (FEMALE)	ILEX VERTICILLATA	3-4'	B&B
IG	8	INKBERRY	ILEX GLABRA	2-3'	B&B

EROSION AND SEDIMENTATION CONTROL

1.) ALL PERIMETER EROSION AND SEDIMENTATION CONTROLS MUST BE INSTALLED PRIOR TO THE COMMENCEMENT OF EARTHWORK.
2.) ACCESSIBLE RESERVES OF HAY BALES AND STAKES ARE TO BE MAINTAINED ON SITE FOR ROUTINE MAINTENANCE AND IN THE EVENT OF UNANTICIPATED PROBLEMS REQUIRING EMERGENCY RESPONSE.
3.) HAY BALES SHOULD BE INSTALLED IN ACCORDANCE WITH THE DETAILS PROVIDED.
4.) NO WORK IS TO OCCUR ON THE WETLAND SIDE OF THE PERIMETER EROSION AND SEDIMENTATION CONTROLS. ALL PERIMETER CONTROLS SERVE AS THE PROJECT LIMIT OF DISTURBANCE.
5.) NO STONES, BRUSH, CONSTRUCTION DEBRIS, LITTER, OR OTHER MATERIALS ARE TO BE DEPOSITED ON THE WETLAND SIDE OF THE EROSION AND SEDIMENTATION CONTROLS.
6.) ALL DISTURBED SOILS NOT DESIGNATED FOR OTHER SURFACE TREATMENT ARE TO BE LOAMED AND SEEDED IMMEDIATELY FOLLOWING FINAL GRADING.
7.) APPROPRIATE PRECAUTIONS SHOULD BE TAKEN TO PREVENT THE TRANSPORT OF SOIL OFF SITE FROM FROM CONSTRUCTION EQUIPMENT.
8.) ALL PERIMETER EROSION AND SEDIMENTATION CONTROLS MUST BE PROPERLY MAINTAINED AND MUST REMAIN IN PLACE UNTIL THE SOILS HAVE BEEN STABILIZED TO THE SATISFACTION OF THE ENGINEER AND THE SEEKONK CONSERVATION COMMISSION.

A.) SCARIFY EXISTING GRAVEL, RESPREAD TO A DEPTH OF 12" & PAVE WITH 1½" BIT. CONC. SURFACE COURSE OVER 1½" BIT. CONC. BINDER

B.) SCARIFY EXISTING PAVEMENT & GRAVEL, RESPREAD TO A DEPTH OF 12" & PAVE WITH 1½" BIT. CONC. SURFACE COURSE OVER 1½" BIT. CONC. BINDER COURSE

PARKING SCHEDULE

PLAT 19 LOTS 504 TO 512 AREA = 43,700 S.F.±
ZONE: LOCAL BUSINESS
OWNER: RICHARD & ROBIN SANTOS
USE:
RETAIL SALES - 1800 S.F. @ 1 SPACE/200 S.F.= 9 SPACES
MUSIC INSTRUCTORS: 6 @ 1 SPACE EACH = 6 SPACES
EMPLOYEES: 4 @ 1 SPACE EACH = 4 SPACES
TOTAL REQUIRED = 19 SPACES
H/C SPACES: 1 VAN = 1 H/C SPACE
TOTAL ATTAINED = 20+1 H/C
MUSIC LESSONS ARE FOR CHILDREN UNDER DRIVING AGE. THEY ARE DROPPED OFF & PICKED UP LATER BY PARENTS

69-444

Received
DEC 21 2001
Con. Comm.

CAPUTO AND WICK LTD. 1150 PAWTUCKET AVE. RUMFORD, R.I. 02916 401-434-8880	PROPOSED PARKING LOT PLAN RICK'S MUSIC WORLD 346 TAUNTON AVENUE SEEKONK, MASSACHUSETTS DATE 12/19/01 SHEET 1 OF 2

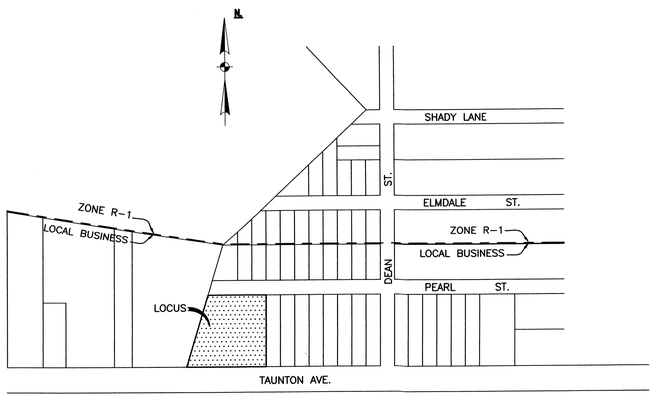

LOCATION MAP
SCALE: 1"=200'

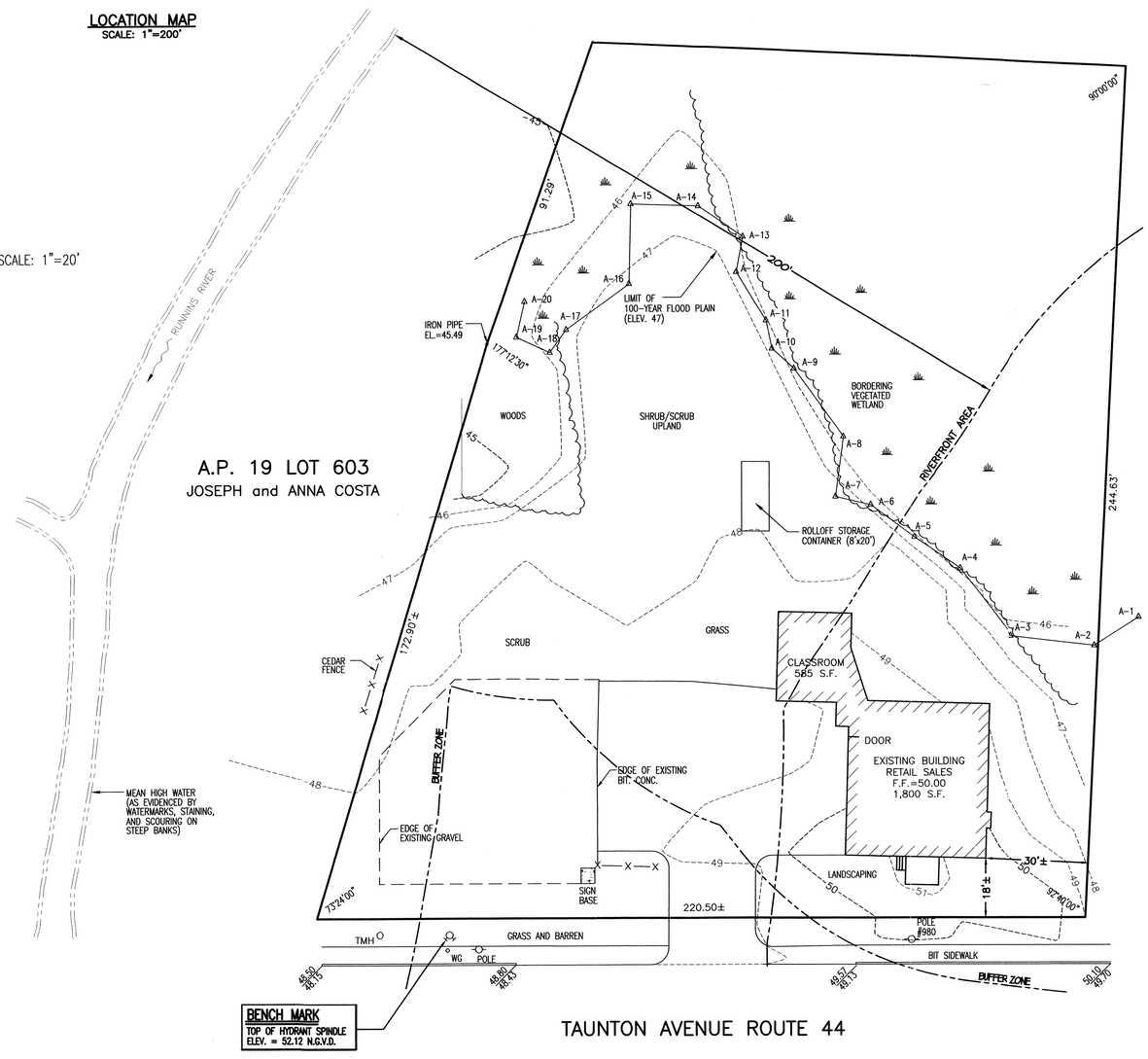

BENCH MARK
TOP OF HYDRANT SPINDLE
ELEV. = 52.12 N.G.V.D.

NOTES:
1. WETLAND EDGES FIELD DELINEATED BY CAPUTO AND WICK LTD. JUNE 15, 2000.
2. EDGE OF FLOOD ZONE A AS FROM FIRM COMMUNITY PANEL NO. 250063 0010A DATED SEPT. 5, 1979
3. TOTAL RIVERFRONT AREA ON PARCEL = 35,196 S.F.
4. EXISTING DEGRADED SURFACES IN RIVERFRONT AREA = 7,041 SF (20.0% OF RIVERFRONT AREA,) WHERE DEGRADED SURFACE IS ROOFTOP, PAVEMENT, GRAVEL, STORAGE CONTAINER.

CAPUTO AND WICK LTD. 1150 PAWTUCKET AVE. RUMFORD, R.I. 02916 401-434-8880	EXISTING CONDITIONS RICK'S MUSIC WORLD 346 TAUNTON AVENUE SEEKONK, MASSACHUSETTS DATE 12/19/01 SHEET 2 OF 2