8 HOLE "D" BOX WITH BAFFLE

DB5-3

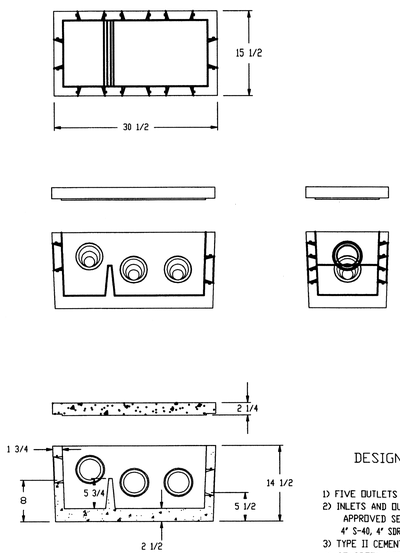

DESIGN NOTES

1) FIVE OUTLETS AND THREE INLETS
2) INLETS AND OUTLETS HAVE STATE APPROVED SEALS THAT ACCEPT 4" S-40, 4" SDR-35, 3" AND 2" PIPE.
3) TYPE II CEMENT ASTM C-150-81
4) CONCRETE STRENGTH 5000 PSI MIN. 28 DAYS

JOLLEY PRECAST, INC.
860-774-9066
OR EQUAL

2000 GALLON 2 COMPARTMENT TANK

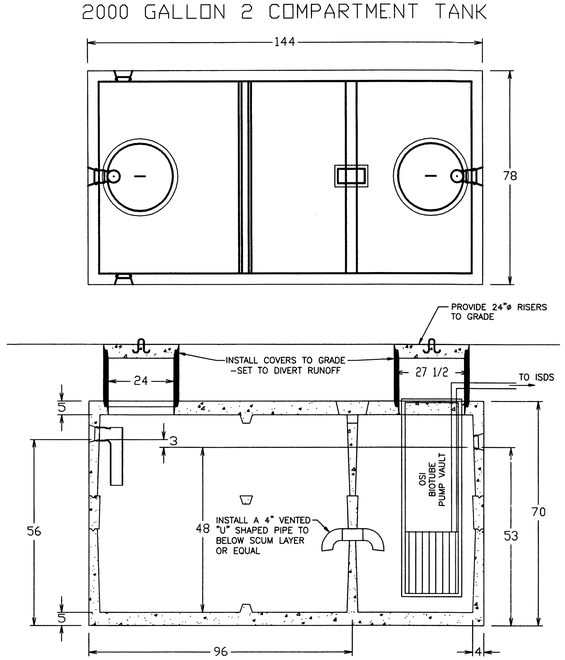

NOTE:
AN EQUIVALENT TANK MAY BE SUBSTITUTED PROVIDED THE OPENING BETWEEN COMPARTMENTS IS WITHIN THE "CLEAR" ZONE.

DESIGN NOTES

1) ALL JOINTS SEALED WITH BUTYL RUBBER SEALANT.
2) ALL INLETS AND OUTLETS HAVE STATE-APPROVED SEALS.
3) AVAILABLE WITH 8" TOP
4) MEETS ASTM C 1227-97A
5) CONCRETE STRENGTH 5000 PSI. MIN. 28 DAYS

JOLLEY PRECAST, INC.
860-774-9066
OR EQUAL

NOTES:
1. REMOVE ALL TOPSOIL AND SUBSOIL WITHIN 5' OF THE TRENCHES AND REPLACE WITH CLEAN GRANULAR FILL AS PER 310 C.M.R. 15.255 TO 96" BELOW EXISTING GROUND.

2. INSTALLER IS TO INSURE THAT PRESSURE SEWER DRAINS BACK TO PUMP CHAMBER TO PREVENT FREEZING AND SHALL PROVIDE A 1/8" WEEPHOLE ABOVE CHECK VALVE TO ALLOW DRAINBACK.

GENERAL NOTES:

1. ALL CONSTRUCTION SHALL CONFORM TO THE TOWN OF SEEKONK BOARD OF HEALTH RULES AND REGULATIONS AND TITLE 5, THE STATE ENVIRONMENTAL CODE.

2. THIS PLAN IS TO BE USED ONLY FOR THE CONSTRUCTION OF THE DESIGNED SEWAGE DISPOSAL SYSTEM AND DOES NOT REPRESENT ACTUAL AS-BUILT CONDITIONS, NOR REFLECT FINAL SITE DESIGN CONDITIONS UNLESS OTHERWISE NOTED.

3. THE PROPOSED SYSTEM SHOWN HEREON IS NOT DESIGNED FOR THE USE OF A GARBAGE DISPOSAL AND SAID USE IS STRICTLY PROHIBITED.

4. THE SEPTIC TANK SHALL BE INSPECTED AND MAINTAINED IN ACCORDANCE WITH TITLE 5 AND LOCAL REQUIREMENTS.

5. ALL WASHED STONE IN FIELD MUST HAVE LESS THAN 0.2 PERCENT MATERIAL FINER THAN A NUMBER 200 SIEVE AS DETERMINED BY THE A.A.S.H.T.O. (AS MOST RECENTLY AMMENDED) AND BE DOUBLE WASHED.

6. TIGHT JOINT PIPING TO CONSIST OF POLYVINYL CHLORIDE PIPE (PVC) SCHEDULE 40, UNLESS OTHERWISE NOTED.

7. NO PERMANENT STRUCTURE MAY BE CONSTRUCTED OVER THE AREA OF THE SEWAGE DISPOSAL SYSTEM.

8. THE SUBJECT PARCEL LIES OUTSIDE OF ANY AQUIFER PROTECTION AREAS OR FLOODPLAIN DISTRICTS OF THE TOWN OF SEEKONK.

I.S.D.S. NOTES:

1. All stages of ISDS installation must be supervised by the designer.

2. The septic tank & distribution box are to have inspection covers as noted to finish grade. These covers are to be installed so as to divert surface water runoff away from the covers. The tank is to be pumped out at least every three years and the pump systems and effluent filter shall be inspected at least quarterly & maintained as per manufacturers recommendations.

3. The contractor shall maintain a copy of the approved plan on-site at all times.

4. It is highly recommended that Atlantic Solutions, LTD. of Portsmouth, RI, tele. 1-401-293-0176, or an authorized representative of Orenco Systems, Inc., (OSI) provide construction oversight to insure proper installation of ISDS & pumping components.

5. For detailed grading, septic system location, legend & associated site alterations, see sheet 1 of 2.

PUMPING NOTES:

1. ALL PUMPS SHALL BE EQUIPPED WITH A HIGH WATER LEVEL VISIBLE AND AUDIBLE ALARM POWERED BY A CIRCUIT SEPARATE FROM THE PUMP POWER. THE ALARM SHALL BE LOCATED IN A NORMALLY OCCUPIED AREA OF THE FACILITY.

2. ALL PUMPS SHALL BE EQUIPPED WITH ELAPSED RUN TIME AND CYCLE COUNT READOUTS. THE SYSTEM SHALL BE CALIBRATED IN THE FIELD TO DETERMINE ACTUAL RATE (GALLONS) PER CYCLE.

3. ALL TANKS AND APPURTENANCES SHALL BE CONSTRUCTED SUCH THAT ALL ELEMENTS ACT AS A SINGLE WATERTIGHT UNIT, WHICH SHALL DEVELOP A FACTOR OF SAFETY AGAINST BUOYANT UPLIFT. CONTRACTOR SHALL SUITABLY COMPACT COHESIVE OVERBURDEN MATERIAL AND/OR PROVIDE SUITABLE BALAST SURCHARGE AND/OR ANCHORING MEASURES AS ARE NEEDED TO MEET THIS REQUIREMENT. THE ISDS INSTALLER SHALL BE RESPONSIBLE FOR TESTING AND SHALL GUARANTEE ALL TANKS, ETC. ARE WATERTIGHT, EITHER BY VACUMM TESTING OR WATER TESTING IN PLACE WITH ALL RISERS INSTALLED.

4. ALL PUMP SYSTEMS SHALL BE IN ACCORDANCE WITH CHAPTER 15.231 OF THE MASSACHUSETTS TITLE V SEWAGE DISPOSAL SYSTEM REGULATIONS.

CONSTRUCTION NOTES:

1.) THE CONTRACTOR SHALL VERIFY THE PROPOSED LAYOUT WITH ITS RELATIONSHIP TO THE EXISTING SITE SURVEY. THE CONTRACTOR SHALL ALSO VERIFY ALL DIMENSIONS, SITE CONDITIONS, AND MATERIAL SPECIFICATIONS AND SHALL NOTIFY THE OWNER AND DESIGNER OF ANY ERRORS, OMESSIONS OR DISCREPANCIES BEFORE COMMENCING OR PROCEEDING WITH WORK. NOTE; THE PROPERTY LINES SHOWN HEREON ARE BASED SOLELY ON ACTUAL FIELD SURVEY.

2.) THE CONTRACTOR SHALL MAKE EXPLORATORY EXCAVATIONS AND LOCATE ANY EXISTING UTILITIES SUFFICIENTLY AHEAD OF CONSTRUCTION TO PERMIT REVISIONS TO PLANS IF NECESSARY. THE EXISTENCE AND/OR LOCATION OF UTILITIES SHOWN ON THESE PLANS MAY BE ONLY APPROXIMATELY CORRECT AND THE CONTRACTOR IS REQUIRED TO TAKE PRECAUTIONARY MEASURES TO PROTECT THE UTILITIES SHOWN HEREON AND ANY OTHER EXISTING UTILITIES NOT OF RECORD OR NOT SHOWN ON THESE PLANS. THE CONTRACTOR SHALL BE RESPONSIBLE FOR REPAIRING, AT HIS EXPENSE, ANY EXISTING UTILITIES DAMAGED DURING CONSTRUCTION.

3.) THIS PLAN DOES NOT GUARANTEE THE EXISTENCE OR NON-EXISTENCE OF UNDERGROUND UTILITIES. PRIOR TO ANY CONSTRUCTION OR EXCAVATION, THE CONTRACTOR SHALL VERIFY THE EXISTENCE AND LOCATION OF, OR THE NON-EXISTENCE OF, ANY UNDERGROUND UTILITIES. THE CONTRACTOR SHALL BE RESPONSIBLE FOR NOTIFYING "DIG SAFE" AT 1-888-344-7233 AT LEAST THREE BUSINESS DAYS PRIOR TO COMMENCEMENT OF EXCAVATION.

4.) RELOCATION OF ANY UTILITIES SHALL BE AT THE OWNERS EXPENSE AND COMPLETED WITH THE UTILITY WORK. THE OWNER SHALL DETERMINE ANY RELOCATIONS REQUIRED PRIOR TO THE START OF CONSTRUCTION.

5.) THE CONTRACTOR SHALL BE RESPONSIBLE FOR REPLACING, WITH MATCHING MATERIALS, ANY PAVEMENT, DRIVEWAYS, WALKS, WALLS, CURBS, ETC. THAT MUST BE CUT OR THAT ARE DAMAGED DURING CONSTRUCTION.

6.) CONTRACTOR AGREES THAT HE SHALL ASSUME SOLE AND COMPLETE RESPONSIBILITY FOR JOB SITE CONDITIONS DURING THE COURSE OF CONSTRUCTION OF THIS PROJECT, INCLUDING SAFETY OF ALL PERSONS AND PROPERTY; THAT THIS REQUIREMENT SHALL APPLY CONTINUOUSLY AND NOT BE LIMITED TO NORMAL WORKING HOURS; AND THAT THE CONTRACTOR SHALL DEFEND, IDEMNIFY AND HOLD THE OWNER AND THE ENGINEER HARMLESS FROM ANY AND ALL LIABILITY, REAL AND ALLEGED, IN CONNECTION WITH THE PERFORMANCE OF WORK ON THIS PROJECT, EXCEPTING FOR LIABILITY ARISING FROM "THE SOLE NEGLIGENCE OF THE OWNER OR THE ENGINEER."

7.) THE CONTRACTOR SHALL PROPERLY GRADE SITE TO ENSURE PROPER DRAINAGE AWAY FROM SEPTIC SYSTEM, BUILDING AND ADJACENT PROPERTY OWNERS. SHALLOW DIVERSION SWALES OR EQUAL NOT SHOWN ON PLANS, MAY BE REQUIRED.

8.) DEWATERING SHALL BE PERFORMED IF NECESSARY DURING EXCAVATION & TANK INSTALLATION PROCEDURES. DISCHARGE SHALL BE PUMPED INTO AN APPROPRIATELY CONSTRUCTED TEMPORARY FILTER FABRIC/STAKED HAYBALE DEWATERING BASIN TO BE LOCATED OUTSIDE OF BIOLOGICAL/PHYSICAL WETLAND LIMITS. DEWATERING BASINS SHALL BE ADEQUATELY MAINTAINED BY THE CONTRACTOR ON A REGULAR BASIS. ACCUMULATED SANDS AND SEDIMENTS SHALL BE REMOVED AS NEEDED AND PROPERLY DISPOSED OF. THE ENTIRE STRUCTURE SHALL BE REMOVED UPON COMPLETION OF ITS USE IN A PARTICULAR AREA.

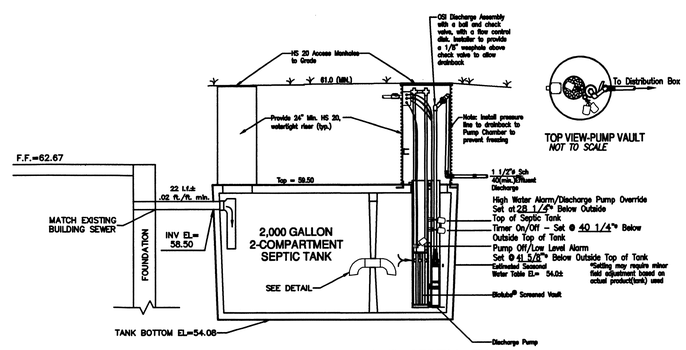

2,000 GALLON TWO COMPARTMENT SEPTIC TANK WITH PUMP DISCHARGE

NOT TO SCALE

PUMP FLOAT ELEVATIONS/SETTINGS

HIGH WATER ALARM	EL = 57.15
"PUMP ON"	EL = 56.15
"PUMP OFF"	EL= 56.04

NOTE:

The distribution lines shall be timed dosed to provide small frequent doses to the drainfield surfaces. The pumps shall be set to disperse approx. 55 gallons per cycle based on 6 doses per day or approximately 60% of distribution piping capacity per dose. The pump settings shall be verified and adjusted accordingly after approximately 90 days to ensure proper dosing by an OSI representative. Approximately 500 gallons of storage is provided above the high water alarm in the event of power outage/pump failure. An OSI P50HH (Model #P5005) effluent pump or equal is required for this installation.

69-596
207

COMMONWEALTH OF MASSACHUSETTS
CARL J. ROMANO
CIVIL
No. 30174
REGISTERED PROFESSIONAL ENGINEER
6-8-06

PLAN OF PROPOSED SITE ALTERATIONS FOR REPAIR/REPLACEMENT OF SEWAGE DISPOSAL SYSTEM

135 HOPE STREET
ASSESSORS MAP #18, PORTION OF LOT 29
SEEKONK, MASSACHUSETTS

PREPARED FOR
Mr. Nathaniel J. Rendine

SCALE: 1" = 30' DATE: 4/21/06

GAROFALO
GAROFALO & ASSOCIATES, INC.
CIVIL & STRUCTURAL ENGINEERS/SURVEYORS
LAND PLANNERS/ENVIRONMENTAL SCIENTISTS
85 COMLISS STREET, P.O. BOX 6145 PROVIDENCE, RI 02940
401-273-6000

SHEET 2 OF 2

DRAWING: 6329.DWG