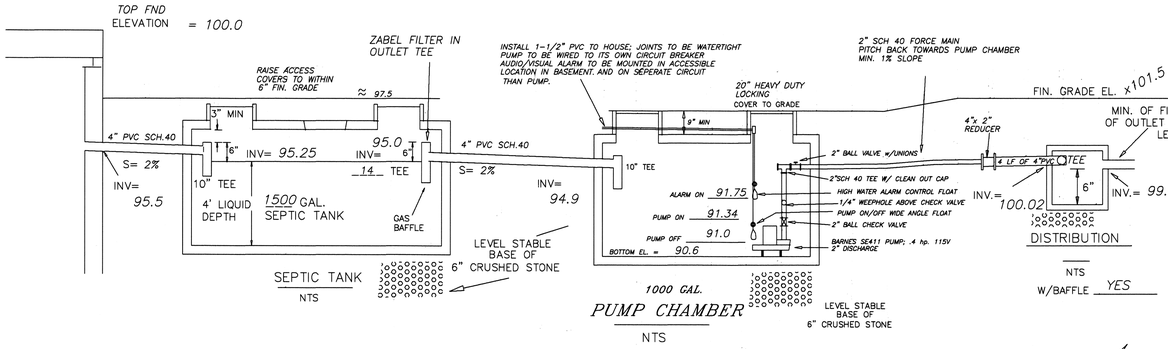

PROFILE OF LEACHING FIELD SEWAGE DISPOSAL SYSTEM

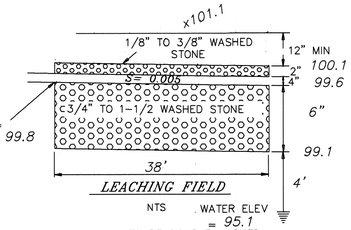

LEACHING FIELD

NTS

OBSERVATION TEST PITS

TP 1
ELEV= 96.1

8"	SL	A	10YR2/1
24"	SL	B	10YR5/8
108"	SILT LOAM	C1	2.5Y5/1
132"	FINE SAND	C2	2.5Y5/3

PERC. TEST @ C2 FT.
SIEVE MIN/IN
WATER EL=
REDOX @ 12" WEEPING @ 36"

SOIL TEST PITS AND PERC. TEST PERFORMED BY:

BILL GOTTWALD DATE : 9/11/08

WITNESSED BY: SEEKONK BOH – BETH

TYPE OF BUILDING EXIST 3 BDRM HOUSE
DESIGN FLOW 3 x 110 GPD/BDRM = 330 GPD

LOCAL UPGRADE APPROVAL:
1. ALLOW THE USE OF A SIEVE ANALYSIS IN LIEU OF A PERC TEST PER 310 CMR
2. ALLOW REDUCTION OF HIGH GROUNDWATER SEPARATION TO 4' FROM 5' AS PER 310 CMR 15.405.

SEPTIC TANK

200% OF DESIGN FLOW= 330 x 2.0= 660 GALLONS
USE 1500 GALLON SEPTIC TANK

GARBAGE GRINDERS NOT ALLOWED!

MATERIAL PASSING THE #10 SIEVE

% SAND	94.5
% SILT	5.1
% CLAY	0.4

SEE REPORT #GS8261B TIBBETTS ENGINEERING DATED 9/26/08

LEACHING FIELD

DESIGN PERC RATE = 2 MIN/IN
SOIL CLASS 1
EFFLUNT LOADING RATE = 0.74 GPD/SF
330 GPD ÷ 0.74 GPD/SF = 446 SF OF LEACHING AREA
FIELD = 12 FT. WIDE x 38 FT. LONG
TOTAL = 456 SF
USE 12'x 38' FIELD

TOTAL LEACHING AREA PROVIDED: 456
MINIMUM REQUIREMENTS PER SEEKONK BOARD OF HEALTH = 446 S.F.
456 S.F.> 446 S.F.

ELEVATION SCHEDULE	DESIGN ELEVATION
TOP OF FOUNDATION	100.0
FINISHED BASEMENT FLOOR	—
SEWER INVERT AT FOUNDATION	95.5
SEWER INVERT INTO SEPTIC TANK	95.25
SEWER INVERT OUT OF SEPTIC TANK	95.0
SEWER INVERT INTO PUMP CHAMBER	94.9
SEWER INVERT INTO DIST. BOX	100.02
SEWER INVERT OUT OF DIST. BOX	99.85
SEWER INVERT INTO LEACHING FIELD	99.8
ELEVATION OF GROUND WATER TABLE	95.1

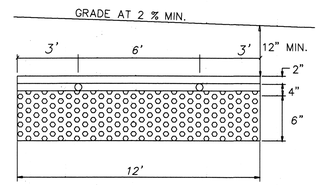

TYPICAL
LEACHING FIELD CROSS SECTION
NTS

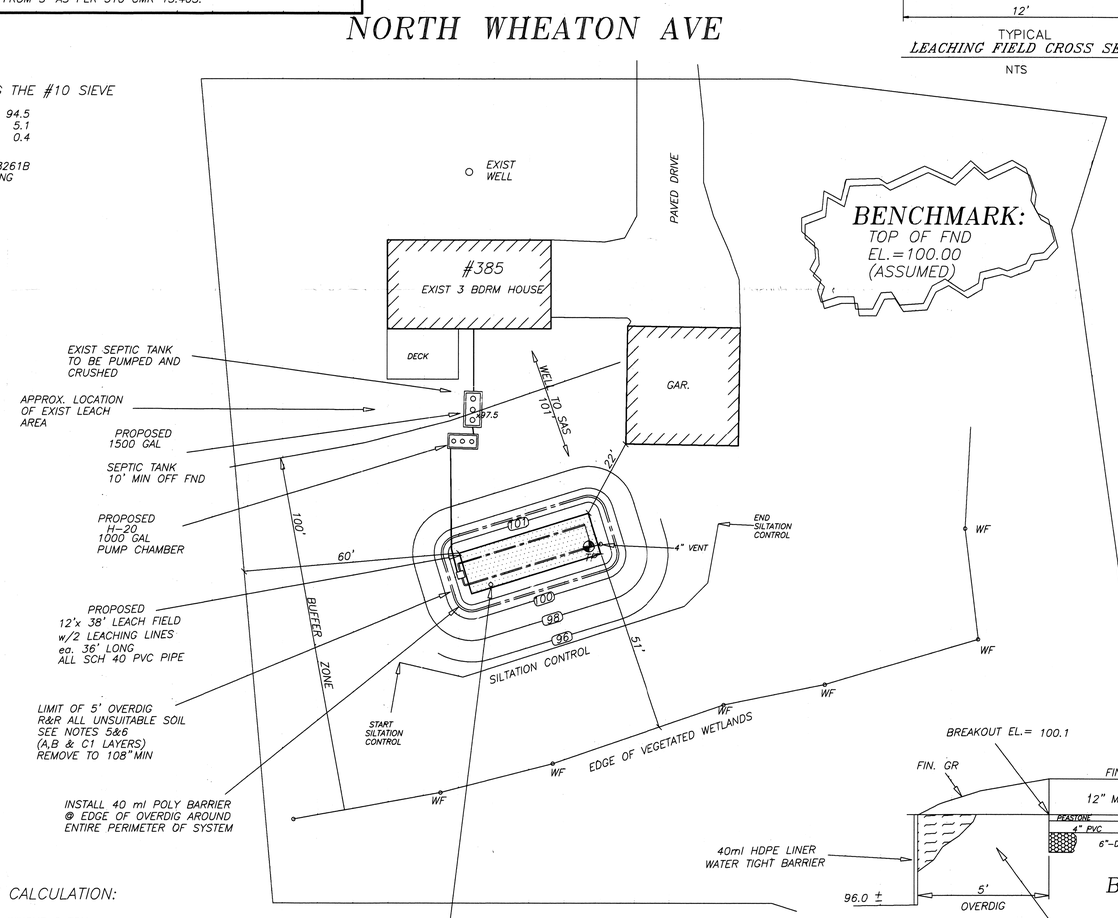

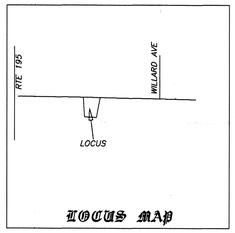

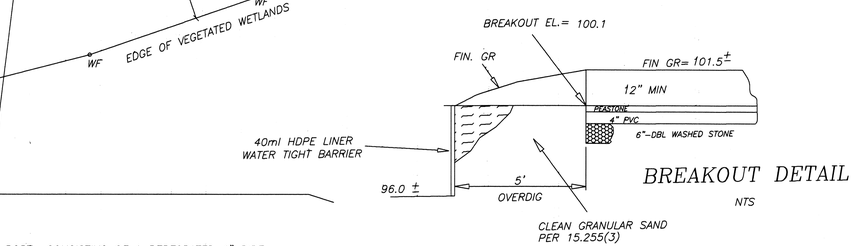

BREAKOUT DETAIL
NTS

INSTALL 1 INSPECTION PORT CONSISTING OF A PERFORATED 4" PIPE PLACED VERTICALLY DOWN INTO THE STONE TO THE NATURALLY OCCURING SOIL OR SAND FILL BELOW THE STONE. THE PIPE SHALL BE CAPPED w/ A SCREW TYPE CAP & ACCESSIBLE TO WITHIN 3" OF FINISH GRADE. MARK w/ MAGNETIC TAPE.

PUMP CHAMBER DESIGN:

330 GPD
USE 1 PUMP @ 4 CYCLES/DAY
330 GPD/4 = 82.5 GAL/CYCLE
USE 1000 GAL. PC W/ CAPACITY OF 244 GAL/ FT OF HT.
82.5 /244 = .34'
STORAGE ABOVE HW =
94.9 −91.75 = 3.15'
3.15 x 244 = 769
769 > 330

BUOYANCY CALCULATION:

1500 GAL TANK WEIGHS 6 TON
BOT. TANK EL.= 90.6 GW EL.= 95.1
4.5 x (10.5'x 5.67') (62.4 #/CF)/2000 = 8.36 TONS
COVER = 1.5'x10.5'x5.67'x 100#/CF= 4.46 TON
4.46 + 5 = 9.46 > 8.36

1000 GAL TANK WEIGHS 4 TON
BOT. TANK EL.= 90.6 GW EL.= 95.1
4.5 x (8.5'x 4.67') (62.4 #/CF)/2000 = 5.57 TON
COVER = 1.5'x8.5'x4.67'x 100#/CF = 3 TON
3+4 = 7 TON > 5.57

GENERAL NOTES:

1. THE SEPTIC TANK SHALL BE 1500 GALLONS MINIMUM, UNLESS OTHERWISE SPECIFIED ON THIS DESIGN PLAN, AND FITTED WITH SCHEDULE 40 PVC TEES OF PROPER LENGTH SEPTIC TANK CONSTRUCTION SHALL CONFORM TO 310 CMR 15.226. THE SEPTIC TANK OUTLET COVER SHALL BE BUILT UP TO WITHIN 6" OF THE FINISHED GRADE UNLESS OTHERWISE SPECIFIED..
2. SEPTIC TANK ANF DISTRIBUTION BOX SHALL BE PLACED ON A 6" MINIMUM COMPACTED GRAVEL BASE.
3. ALL JOINTS MUST BE WATERTIGHT, SEALED WITH SUITABLE CEMENT FOR THAT SPECIFIC COMPONENT.
4. SOIL PREPERATION FOR THE LEACHING AREA SHALL CONFORM TO 310CMR 15.246 & 15.247
5. ANY EXCAVATION OF UNSUITABLE MATERIAL DESIGNATED ON THE PLAN SHALL CONFORM TO CONSTRUCTION IN FILL REQUIREMENTS AS OUTLINED IN 310CMR 15.255 (1-6)
6. FILL MATERIAL FOR SYSTEMS CONSTRUCTED IN FILL SHALL BE COMPRISED OF CLEAN GRANULAR SAND, FREE FROM ORGANIC MATTER AND DELETERIOUS SUBSTANCES.

   AGGREGATE SPECIFICATIONS SHALL CONFORM TO 310 CMR 15.247.
   24 HOUR NOTICE REQUIRED FOR INSTRUCTIONS
   ANY ALTERATIONS MUST BE REPORTED TO THE DESIGN ENGINEER PRIOR TO PROCEEDING WITH CONSTRUCTION.
7. NO HEAVY EQUIPMENT SHALL BE RUN OVER THE COMPONENTS OR LEACHING BED DURING CONSTRUCTION.
8. DEEP TEST HOLE INFORMATION INDICATES SOIL CONDITION, PERCOLATION RATE AND WATER TABLE ELEVATION AT THE TIME AND LOCATION OF ACTUAL TESTING ONLY. IF UNSUITABLE MATERIAL OR A HIGHER GROUNDWATER ELEVATION IS ENCOUNTERED, THE BOARD OF HEALTH AND DESIGN ENGINEER SHALL BE NOTIFIED.
9. AREAS DISTURBED DURING CONSTRUCTION SHALL BE STABILIZED TO HELP PREVENT EROSION. THE AREA OVER THE SYSTEM SHALL BE GRADED TO A MINIMUM OF 2% SLOPE, TO PROVIDE POSITIVE SURFACE DRAINAGE.
10. NO STRUCTURE MAY BE CONSTRUCTED OVER THE RESERVE AREA.
11. THE SYSTEM SHALL BE VENTED IF THE TRENCH LENGTH EXCEEDS 50' OR IF IT IS COVERED BY IMPERVIOUS SURFACE. ALL PUMPED SYSTEMS ARE TO BE VENTED.
12. IF ANY COMPONENTS OF THE PROPOSED SYSTEM ARE SPECIFIED AS HEAVY DUTY, THOSE COMPONENTS SHALL CONFORM TO ALL STATE AND LOCAL REQUIREMENTS FOR AASHTO H-20 LOADING.
13. THE SYSTEM MUST BE INSPECTED BY THE BOARD OF HEALTH AND THE DESIGN ENGINEER, PRIOR TO BACKFILLING.
14. UNLESS SPECIFIED IN THE BASIS OF SANITARY DESIGN, THIS SYSTEM IS NOT DESIGNED FOR THE USE OF A GARBAGE GRINDER OR OTHER HIGH WATER USAGE DEVICE
15. IF THE D-BOX IS DOSED OR THE INLET SLOPE EXCEEDS 8%, AN INLET TEE OR BAFFEL IS REQUIRED.
16. ALL CONSTRUCTION SHALL CONFORM TO 310 CMR 15.00, TITLE V AND THE REGULATIONS OF THE LOCAL BOARD OF HEALTH.
17. IT IS THE CONTRACTORS RESPONSIBILITY TO SECURE ALL NECESSARY PERMITS PRIOR TO ANY SITE ACTIVITY. A STAMPED COPY OF THE APPROVED PLAN SHALL BE KEPT ON-SITE.
18. ANY EXISTING UTILITIES SHOWN ARE APPROXIMATE ONLY. CONTRACTOR TO VERIFY PRIOR TO EXCAVATION.
19. ALL KNOWN PUBLIC AND PRIVATE WELLS PER 310 CMR 15.220(k) ARE SHOWN.
20. CONSERVATION COMMISSION APPROVAL MAY BE REQUIRED.
21. FOR OPTIMUM PERFORMANCE, THE SEPTIC TANK SHOULD BE INSPECTED ANNUALLY AND WHEN THE SOLIDS AND SCUM DEPTH EXCEEDS 1/3 OF THE LIQUID DEPTH, THE TANK SHOULD BE PUMPED.

Received
NOV 10 2008
Con. Comm.

69-644

REPAIR

ON-SITE SEWAGE DISPOSAL SYSTEM

ASSESSORS 3/26
385 NORTH WHEATON AVE
SEEKONK, MASSACHUSETTS

OWNER
FRANK BARAO

COMMONWEALTH OF MASSACHUSETTS WILLIAM E. GOTTWALD JR. CIVIL No. 32844 PROFESSIONAL ENGINEER

PREPARED FOR: CANDIGIT
SCALE: 1"=20' DATE: 9/30/08 REV 10/29/08

DMG
DMG ASSOCIATES
40 THOMAS RD.
BERKLEY, MA
(508) 828-9591