1) FIRST COMPARTMENT: 1100 GALLONS
2) SECOND COMPARTMENT: 550 GALLONS
3) PROVIDED: 2 COMP 2000 GALLON MONOLITHIC SEPTIC TANK

SEPTIC TANK REQUIREMENTS

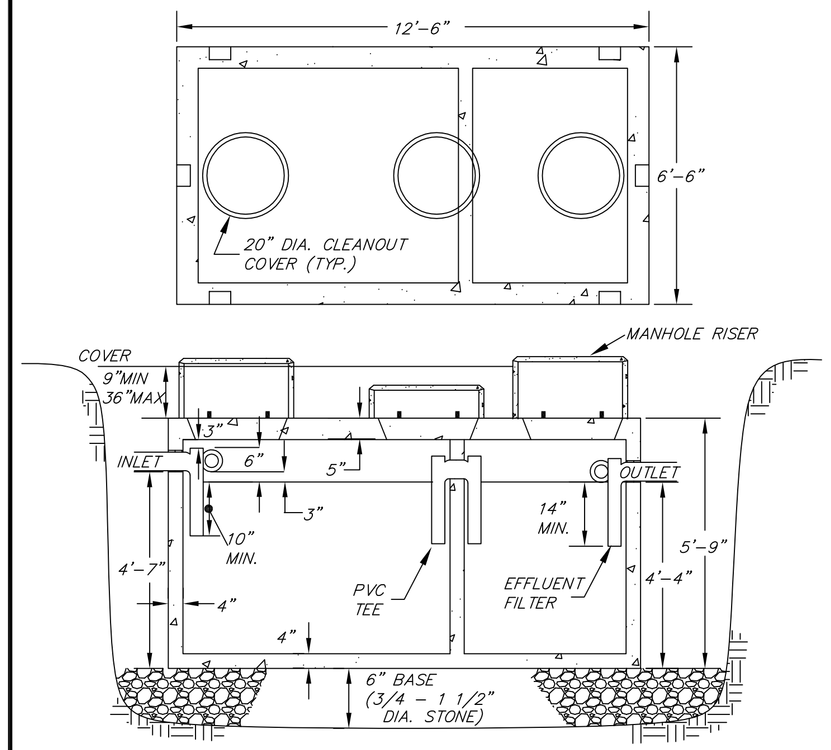

SHEA CONCRETE MODEL TK-M20002C STANDARD, OR EQUAL
WEIGHT OF TANK= 19,150 LBS

NOTES:

1) TANK SHALL BE WATERTIGHT THROUGH MANUFACTURER'S SPECIFICATIONS AND WARRANTY.
2) TANK SHALL BE SET LEVEL AND TRUE TO GRADE ON A LEVEL BASE WHICH HAS BEEN MECHANICALLY COMPACTED.
3) TANK SHALL BE EMBOSSED WITH A SEAL STATING THAT ASTM STANDARD C 1227-93 HAS BEEN MET.
4) THE OUTLET TEE SHALL BE EQUIPPED WITH AN EFFLUENT FILTER, (ZABEL A-1800 OR EQUAL) AND GAS BAFFLE.
5) THE INLET & OUTLET COVERS SHALL HAVE A RISER TO FINISH GRADE. THE CENTER COVER SHALL HAVE A RISER TO WITHIN 6" OF FINISH GRADE.
6) SECURE COVERS TO PREVENT UNAUTHORIZED ACCESS.

2000 GALLON MONOLITHIC SEPTIC TANK

310 CMR 15.223 – 15.228
(NOT TO SCALE)

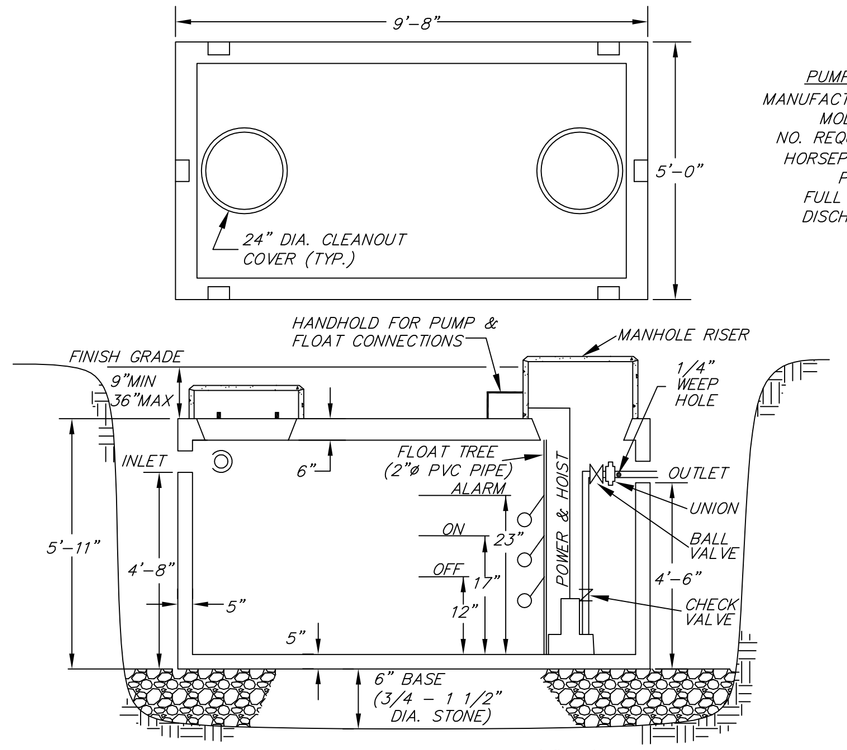

SHEA CONCRETE MODEL M1000H H-20 (6"TOP), OR EQUAL
WEIGHT OF TANK= 14825 LBS

NOTES:

1) TANK SHALL BE WATERTIGHT THROUGH MANUFACTURER'S SPECIFICATIONS AND WARRANTY.
2) TANK SHALL BE SET LEVEL AND TRUE TO GRADE ON A LEVEL BASE WHICH HAS BEEN MECHANICALLY COMPACTED.
3) TANK SHALL BE EMBOSSED WITH A SEAL STATING THAT ASTM STANDARD C 1227-93 HAS BEEN MET.
4) PUMP SHALL BE ON A SEPARATE CIRCUIT FROM ALARM.
5) ALARM AND PUMP CONTROLS SHALL BE ACCESSIBLE TO LIVING UNIT.
6) PUMP AND FLOAT CONNECTIONS SHALL BE PLACED IN A HANDHOLD ADJACENT TO THE OUTLET MANHOLE RISER.
7) MANHOLE RISERS REQUIRED: WITHIN 6" OF GRADE FOR INLET AND TO-GRADE FOR OUTLET.
8) SECURE COVERS AT-GRADE TO PREVENT UNAUTHORIZED ACCESS.

1000 GALLON MONOLITHIC PUMP CHAMBER

310 CMR 15.231
(NOT TO SCALE)

PUMP SPECIFICATIONS:

MANUFACTURER: LIBERTY PUMPS
MODEL #: LE41M
NO. REQUIRED: ONE (1)
HORSEPOWER: 0.4
PHASE: 1
FULL AMPS 12
DISCHARGE: 2"

PUMP ACCESSORIES:

CONTROL PANEL: LIBERTY SXL24=3
ALARM: INCLUDED
VISUAL & AUDIBLE
FLOATS: INCLUDED
PILOT-DUTY FLOAT SWITCHES
NO. REQUIRED: 3

DAILY FLOW:		550	GALLONS/DAY	
SOIL PERC RATE:		7	MININ	
SOIL TYPE:		Class I	6	DOSES/DAY
VOLUME/DOSE:	DOSE	91.7	GALLONS	
	PIPE	33.4	GALLONS	
	TOTAL	125.1	GALLONS/DAY	
FORCE MAIN:		2	DIA.	
PUMP CHAMBER:	(INSIDE DIMENTIONS)			1000 GALLON MONO TANK
	LENGTH		8.83	FT
	WIDTH		4.17	FT
	EFF DEPTH		4.08	FT
	INLET INVERT		97.20	
	SUMP		93.12	
	OFF		94.12	
	ON		94.54	
	ALARM		95.04	
STATIC HEAD:		94.12	PUMP OFF	
		109.77	DBOX	
	Hs=	15.65	FEET	

EQUIVALENT LENGTH: (2" SCH40 PVC PIPE)

PUMP CHAMBER	1 90 DEGREE BENDS	5	
	1 GATE VALVE	1.2	
	1 CHECK VALVE	14	
	TOTAL	20.2	
		USE:	21
PIPE RUN	2 90 DEDGREE BENDS	10	
	5 45 DEGREE BENDS	12.5	
	1 CHECK VALVE	14	
	LENGTH OF PIPE	205	
	ADDITIONAL LENGTH	21	
	TOTAL	262.5	
		USE	263
		TOTAL EQUIVALENT LENGTH	284

SYSTEM CURVE:

Q GPM	V FT/SEC	Hf/100 FT FT/100FT	Hf FT	Hs FT	TDH FT
10	0.90	0.20	0.57	15.65	16.22
15	1.35	0.43	1.21	15.65	16.86
20	1.80	0.73	2.06	15.65	17.71
25	2.25	1.10	3.12	15.65	18.77
30	2.71	1.54	4.37	15.65	20.02
35	3.16	2.05	5.81	15.65	21.46
40	3.61	2.62	7.44	15.65	23.09

OPERATING POINT:

HEAD	18.8	FT
FLOW RATE	25	GPM
TIME ON	4.6	MINUTES

NOTES:

1. THIS PLAN IS INTENDED ONLY FOR THE CONSTRUCTION OF A SEPTIC SYSTEM TO SERVE THE SITE. NO OTHER USE OF THIS PLAN IS AUTHORIZED. PROPERTY LINES SHOWN HERE-ON ARE APPROXIMATE AND INTENDED ONLY TO SHOW THAT MINIMUM SETBACKS HAVE BEEN MET. NO BOUNDARY SURVEY WAS PERFORMED IN PREPARATION OF THIS PLAN.
2. CONTRACTOR SHALL NOTIFY DIGSAFE AT 1-888-DIG-SAFE (888-233-7233) AT LEAST 72 HOURS PRIOR TO ANY EXCAVATION.
3. CONTRACTOR SHALL MAKE THEMSELVES AWARE OF ALL CONSTRUCTION REQUIREMENTS ASSOCIATED WITH THE JOB.
4. ANY AND ALL REVISIONS TO THE APPROVED PLAN SHALL BE APPROVED BY THE DESIGN ENGINEER AND THE APPROPRIATE TOWN REPRESENTATIVE.
5. CONTRACTOR SHALL BE RESPONSIBLE FOR THE PROJECT WITH RESPECT TO SAFETY METHODS, CONSTRUCTION METHODS AND SUPERVISION OF WORKERS.
6. CONTRACTOR SHALL OBTAIN ALL NECESSARY PERMITS FOR THE PROJECT, AND SHALL BE A LICENSED SEPTIC INSTALLER, IN THE TOWN IN WHICH THE SEPTIC SYSTEM IS BEING INSTALLED.
7. CONTRACTOR SHALL VERIFY LOCATION AND ELEVATION OF BENCHMARKS, PRIOR TO CONSTRUCTION. DESIGN ENGINEER SHALL BE NOTIFIED OF ANY DISCREPANCIES IN THE BENCHMARK ELEVATIONS.
8. CONTRACTOR SHALL CONFIRM THAT THE DESIGN PLAN DETAILS ARE CONSISTENT WITH THE CURRENT MANUFACTURER'S SPECIFICATIONS.
9. APPROVAL OF THE SEPTIC DESIGN, ISSUANCE OF A DISPOSAL SYSTEM CONSTRUCTION PERMIT AND ISSUANCE OF THE CERTIFICATE OF COMPLIANCE SHALL NOT BE CONSTRUED AS A GUARANTEE THAT THE SEPTIC SYSTEM WILL FUNCTION SATISFACTORILY.
10. BACKWASH FROM A WATER SOFTENER SHALL NOT BE DISCHARGED INTO A SEPTIC SYSTEM.
11. ALL WORK SHALL COMPLY WITH 310CMR15.000 AND LOCAL BOARD OF HEALTH REGULATION, UNLESS VARIANCES/WAIVERS HAVE BEEN APPROVED.
12. ALL WORK OUTSIDE OF THE BUILDING THAT IS LESS THAN 10 FEET FROM THE OUTSIDE FACE OF THE OF THE BUILDING, SHALL CONFORM TO 248CMR2.00, THE STATE PLUMBING CODE.
13. ALL SEPTIC SYSTEM COMPONENTS ARE GREATER THAN 400 FEET FROM SURFACE WATER SUPPLIES AND GREATER THAN 200 FEET FROM ANY TRIBUTARY TO A SURFACE WATER SUPPLY.
14. THERE ARE NO KNOWN WELLS WITHIN 100 FEET OF THE SOIL ABSORPTION SYSTEM OR WITHIN 50 FEET OF SEPTIC TANKS.
15. THERE ARE NO KNOWN WETLANDS WITHIN 100 FEET OF THE SOIL ABSORPTION SYSTEM.
16. THERE ARE FRESHWATER WETLANDS WITHIN 100 FEET OF THE SEPTIC SYSTEM. THIS PLAN SHALL ACCOMPANY A NOTICE OF INTENT FILED WITH THE LOCAL CONSERVATION COMMISSION AND THE MASSACHUSETTS DEPARTMENT OF ENVIRONMENTAL PROTECTION.
17. WETLAND ONSITE WERE DELINEATED BY RIMMER ENVIRONMENTAL CONSULTING, LLC, JUNE 2013. WETLAND LINE WAS TAKEN FROM "SITE PLAN – SHOWING A PROPOSED RELOCATION OF A GRAVEL ROAD IN BOXFORD MA PREPARED FOR JAMES H. NASON" DATED DECEMBER 5, 2013, BY DONOHOE SURVEY, INC. PLAN ACCOMPANIED A NOTICE OF INTENT FILED 12/10/2013 WITH ORDER OF CONDITIONS ISSUED 3/10/2014.
18. FILL MATERIAL FOR SYSTEMS CONSTRUCTED IN FILL SHALL CONSIST OF ASTM C-33 SAND AND SHALL CONFORM TO 310CMR15.255(3).
19. CONTRACTOR SHALL REMOVE A & B SOIL HORIZON(S) AND OTHER DELETERIOUS MATERIAL WITHIN 5 FT OF SOIL ABSORPTION SYSTEM AND REPLACE WITH ASTM C-33 SAND UPTO BREAKOUT ELEVATION.
20. COMPONENTS SHALL NOT BE BACKFILLED WITHOUT INSPECTION BY THE BOARD OF HEALTH AND ENGINEER, AND PERMISSION OBTAINED FROM EACH.
21. VEHICULAR TRAFFIC, PARKING OF VEHICLES, STOCKPILING OF MATERIALS AND STORAGE OF EQUIPMENT OVER LEACHING AREA IS PROHIBITED.
22. ALL SEPTIC COMPONENTS SHALL BE MARKED WITH MAGNETIC MARKING TAPE OR A COMPARABLE MEANS IN ORDER TO LOCATE THEM ONCE BURIED.
23. SITE COMPLIES WITH 310CMR15.214: NITROGEN LOADING LIMITATIONS.
24. THE EXISTING SEPTIC SYSTEM SHALL BE EITHER CRUSHED AND FILLED WITH CLEAN FILL, OR REMOVED, AS PER 310CMR15.00.
25. CONTRACTOR SHALL VERIFY THAT THE SEPTIC TANK CAN BE CONNECTED TO THE BUILDING SEWER AS SHOWN, WITH A MINIMUM 2% SLOPE. IF NOT, CONTRACTOR SHALL NOTIFY ENGINEER, IMMEDIATELY.
26. IF BUILDING SEWER PIPE EXCEEDS 8% SLOPE, CONTRACTOR SHALL INSTALL A DROP CLEANOUT TO REDUCE PIPE SLOPE TO 2% (SEE DROP CLEANOUT DETAIL, BELOW).

BUOYANCY CALCULATIONS:

	2000 GALLON SEPTIC TANK 2-COMPARTMENT TANK		1000 GALLON MONOLITHIC 1 COMPARTMENT TANK	
FINISH GRADE	100.00		99.00	
MANHOLE GRADE	100.00		99.00	
ESHGW	95.00		95.00	
INLET INVERT	97.50		97.20	
TOP	98.67		98.45	
BOTTOM	92.92		92.53	
BALLAST WEIGHT	0	LBS	0	LBS
WEIGHT OF SOILS	10509	LBS	2545	LBS
WEIGHT OF TANK	19150	LBS	14825	LBS
WEIGHT OF DISPLACED WATER	10546	LBS	7452	LBS
NET FORCES:**	19113	LBS	9918	LBS
FACTOR OF SAFETY:	2.81		2.33	

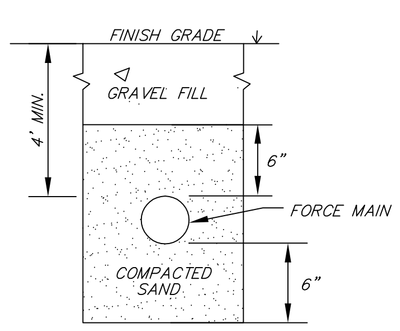

1) TRENCH SHALL BE PLACED IN UNDISTRUBED SUBGRADE OR COMPACTED TO 95% PER ASTM D-1557

FORCE MAIN TRENCH

310 CMR 15.221(6)
(NOT TO SCALE)

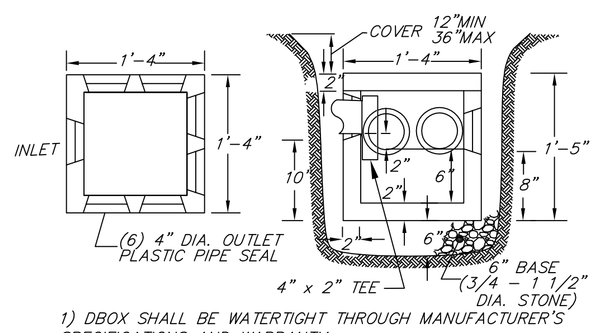

1) DBOX SHALL BE WATERTIGHT THROUGH MANUFACTURER'S SPECIFICATIONS AND WARRANTY.
2) SPEED-LEVELLERS SHALL NOT BE INSTALLED IN OUTLET PIPES.
3) OUTLET PIPES SHALL BE LEVEL FOR THE FIRST TWO FEET (MIN.).
4) OUTLET PIPES SHALL BE CEMENTED TO DBOX USING HYDRAULIC CEMENT

DISTRIBUTION BOX (6-OUTLET)

310 CMR 15.232
(NOT TO SCALE)

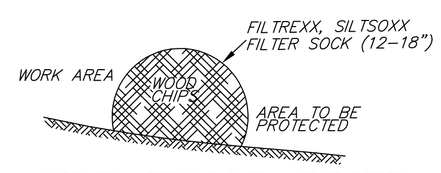

SILTATION BARRIER

(NOT TO SCALE)

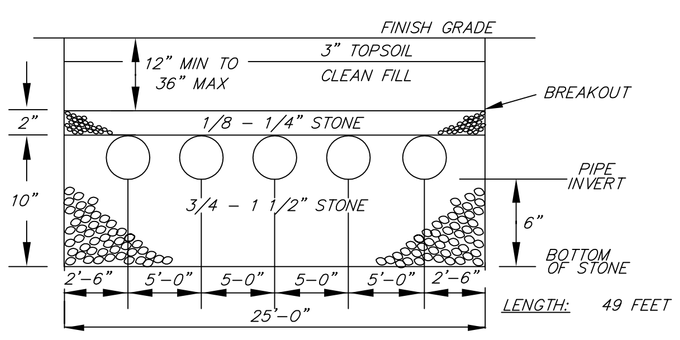

1) BOTTOM OF EXCAVATION SHALL BE LEVEL AND SCARIFIED PRIOR TO PLACING STONE.
2) PIPE SHALL BE LAID WITH ORIFICES AT 5 AND 7 O'CLOCK
3) DISTRIBUTION LINES SHALL BE LAID AT A SLOPE OF 0.005 FT/FT.
4) ENDS SHALL BE CONNECTED TO A VENT.

LEACH FIELD DETAIL:

310 CMR 15.252
(NOT TO SCALE)

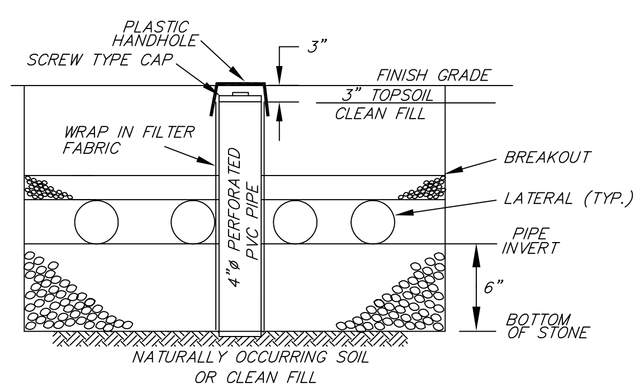

INSPECTION PORT

310 CMR 15.240(13)
(NOT TO SCALE)

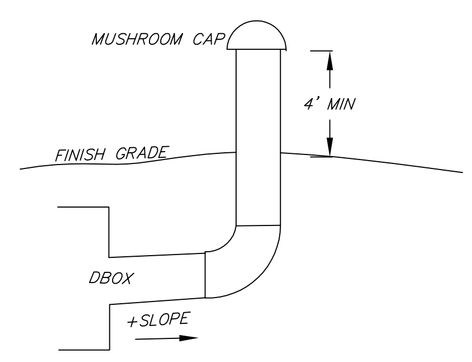

1) VENT SHALL BE SAME SIZE AS LEACH LINES
2) VENT PIPE SHALL HAVE A CHARCOAL FILTER.
3) VENT SHALL BE SCH-40 PVC PIPE
4) OWNER SHALL BE CONSULTED REGARDING PLACEMENT OF VENT.

VENT

310 CMR 15.241
(NOT TO SCALE)

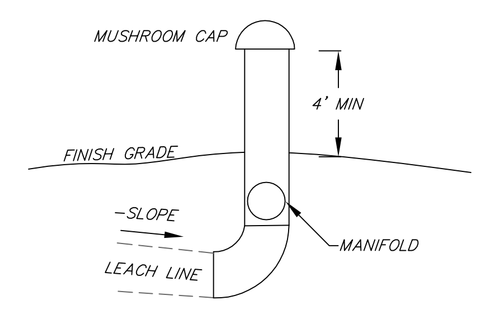

1) VENT SHALL BE SAME SIZE AS LEACH LINES
2) VENT PIPE SHALL HAVE A CHARCOAL FILTER
3) VENT SHALL BE SCH-40 PVC PIPE
4) OWNER SHALL BE CONSULTED REGARDING PLACEMENT OF VENT.

VENT

310 CMR 15.241
(NOT TO SCALE)

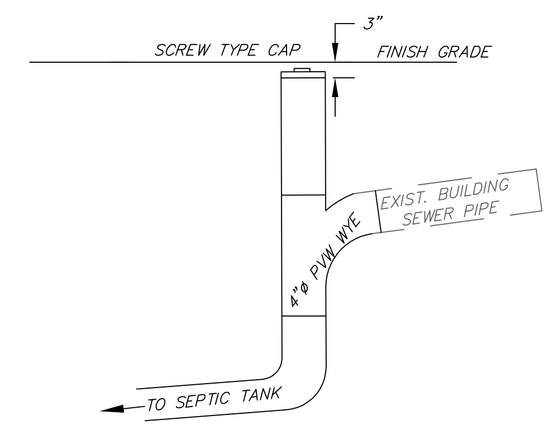

DROP CLEANOUT

(NOT TO SCALE)

SUBSURFACE SEWAGE DISPOSAL SYSTEM UPGRADE

277 WASHINGTON STREET
BOXFORD MA

REGISTRY INFORMATION:

DEED:
BOOK NO.: 32904
PAGE NO.: 549

ASSESSORS INFORMATION:

MAP: 9
BLOCK: 1
LOT: 28

PREPARED FOR:

JAMES NASON
277 WASHINGTON STREET
BOXFORD MA

SCANLAN ENGINEERING LLC
PO BOX 906-GEORGETOWN, MA 01833
PHONE: (978) 372-3440
FAX: (978) 891-3888
EMAIL: info@scanlanengineering.com
WEB: www.scanlanengineering.com

COMMONWEALTH OF MASSACHUSETTS
JAMES B. SCANLAN
CIVIL
No. 46696
REGISTERED PROFESSIONAL ENGINEER
7/23/15

#	BY	DATE	REVISIONS TO PLANS
1	JBS	7/23/15	WETLANDS DELINEATION

DATE: JULY 1, 2015
DESIGN BY: JBS
DRAWN BY: JBS

DETAILS & NOTES

SHEET 2 OF 2
SCALE: 1"= 20'
PROJECT # 0669